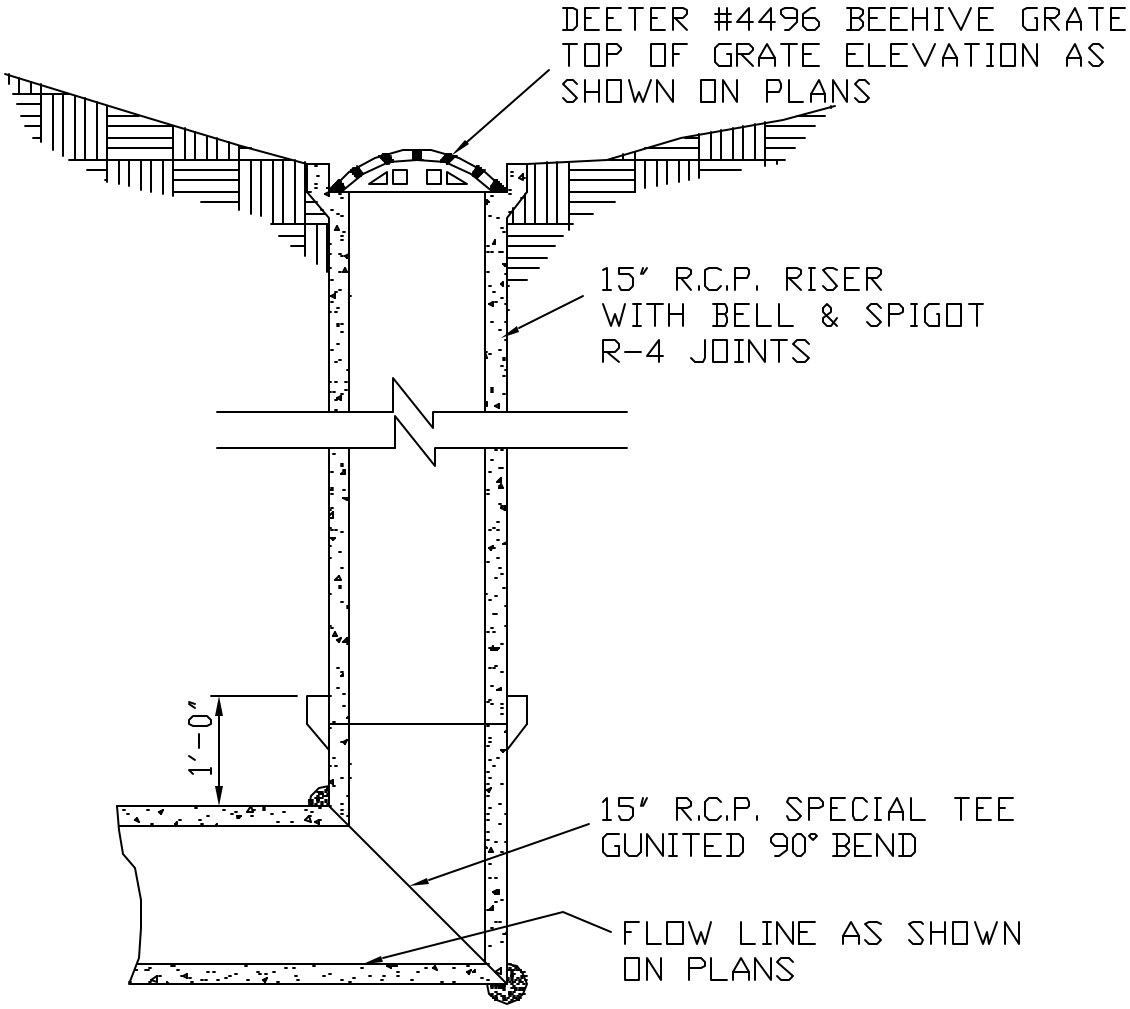

CITY OF GRAND ISLAND PUBLIC WORKS DEPARTMENT	DATE: JULY 1983 DRAWN BY P.E.S. APPVD. BY	SPECIAL TEE & RISER	PLAN 154