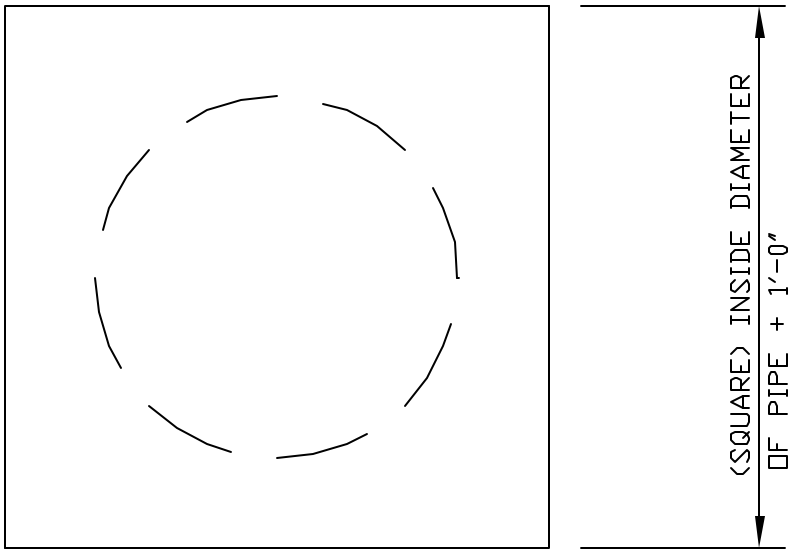

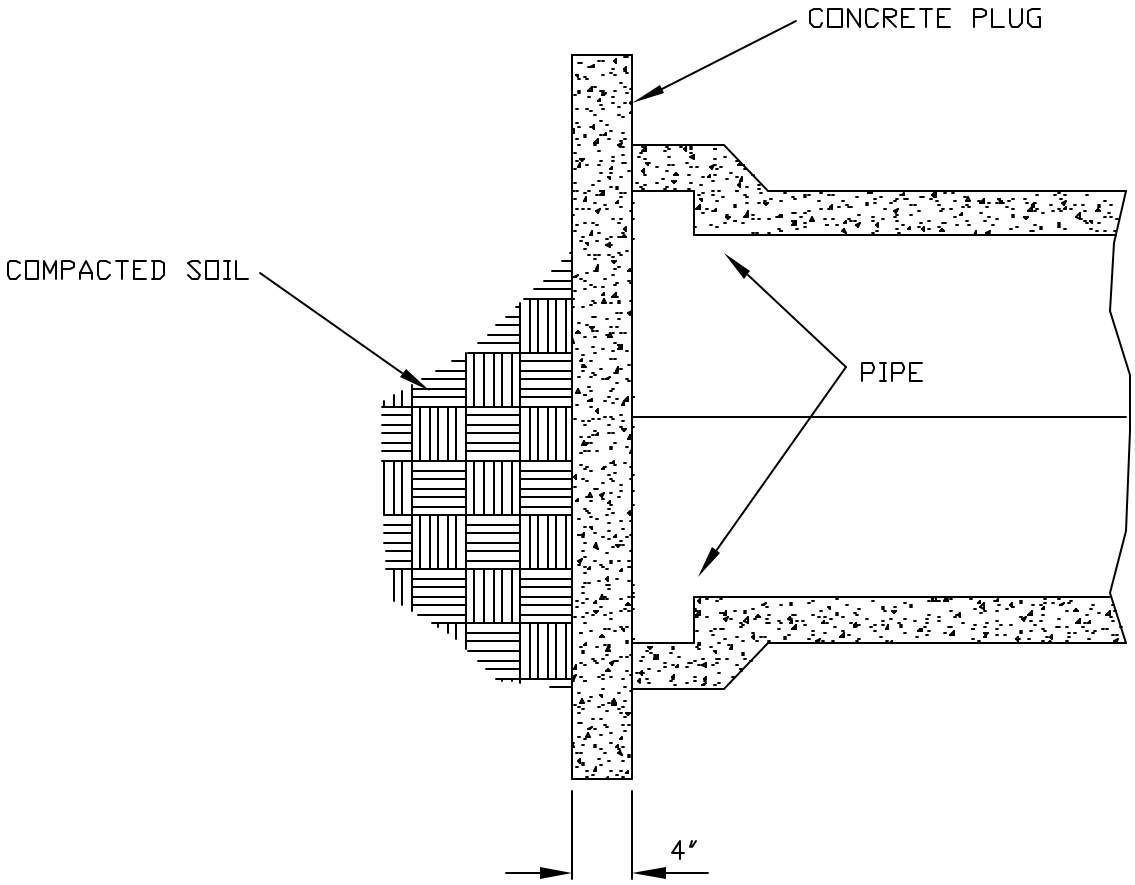

CITY OF GRAND ISLAND
PUBLIC WORKS DEPARTMENT

DATE: FEB 1978
DRAWN BY P.E.S.
APPVD. BY B.T.

CONCRETE PLUG
FOR
STORM SEWER PIPE

PLAN
150