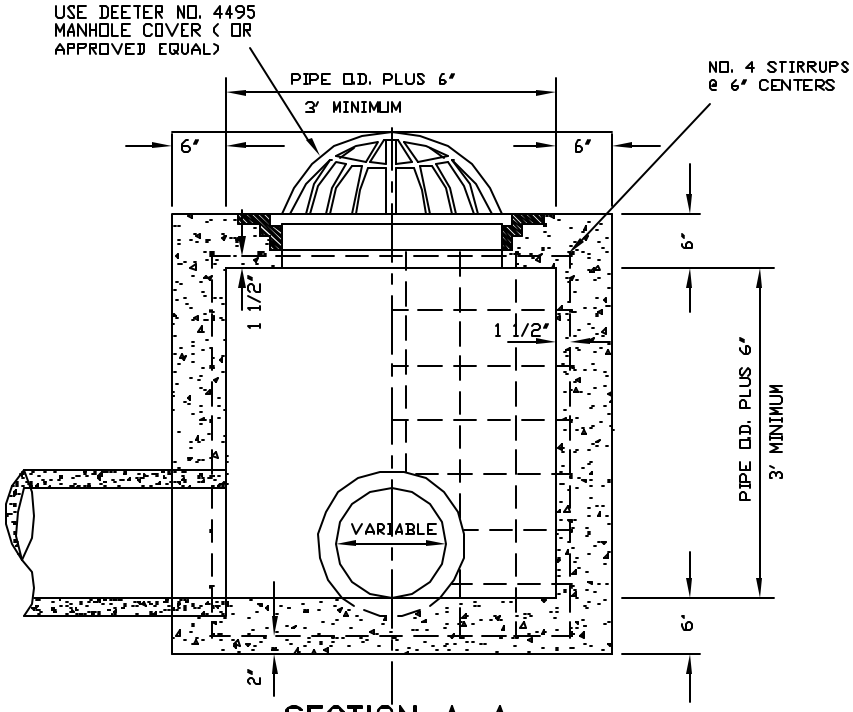

SECTION A–A

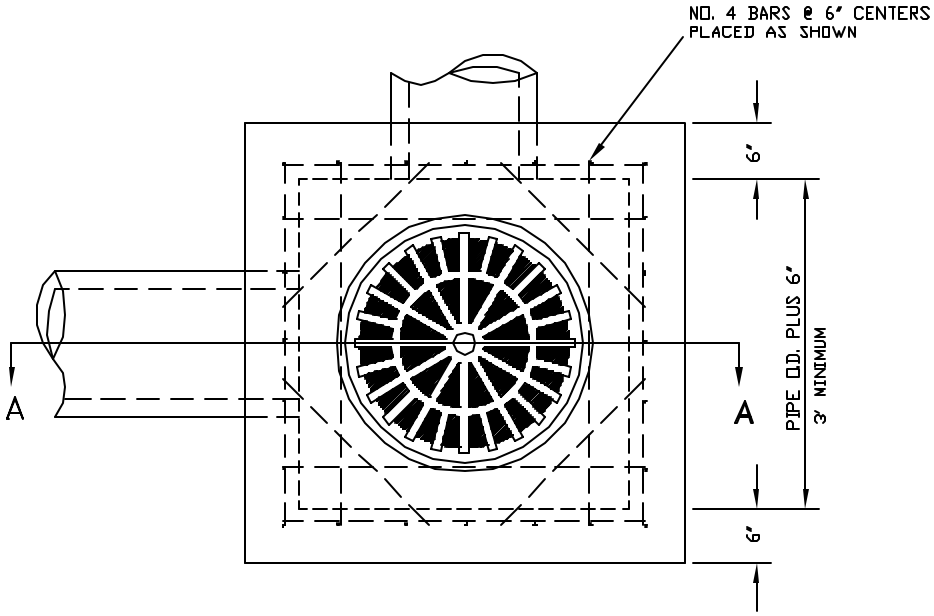

PLAN

REVISED MARCH 24, 1989

CITY OF GRAND ISLAND PUBLIC WORKS DEPARTMENT	DATE: FEB. 1964 DRAWN BY L.D.C. APPVD. BY	JUNCTION BOX WITH BEEHIVE INLET	PLAN 149