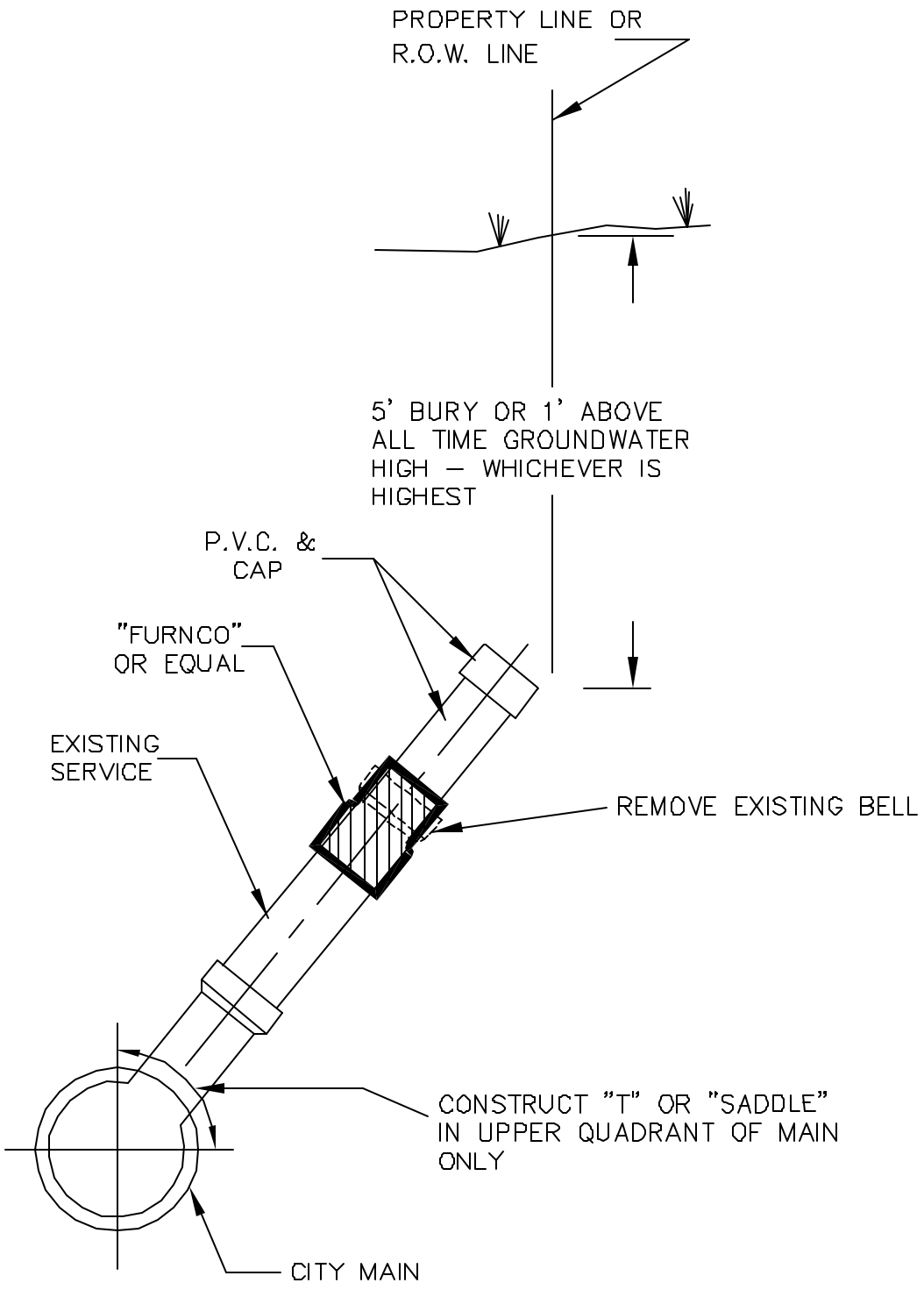

CITY OF GRAND ISLAND PUBLIC WORKS DEPARTMENT	DATE: 2-25-99 DRAWN BY: P.E.S. APPVD. BY: W.B.	SANITARY SEWER CAP	PLAN 132-C