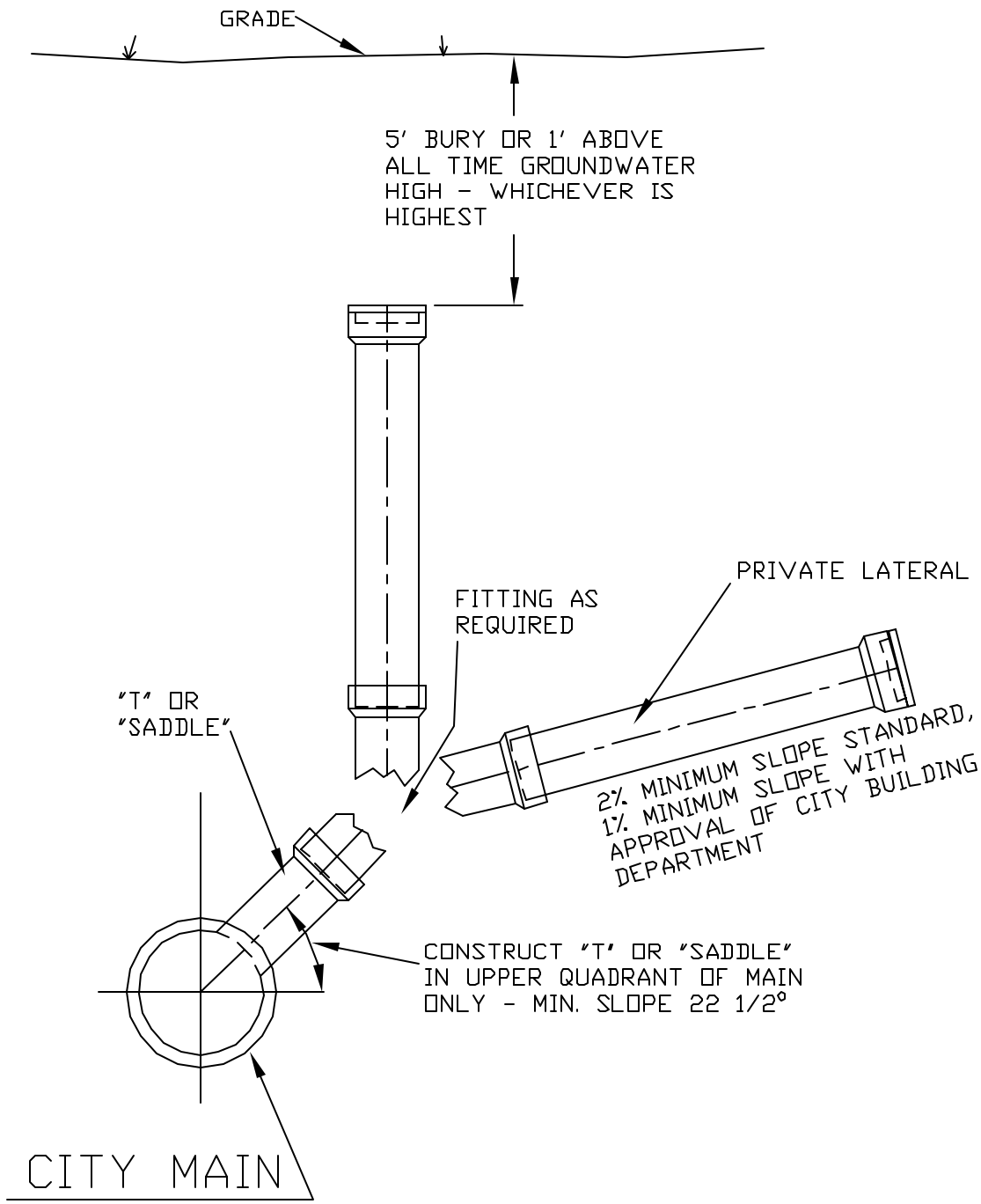

CITY OF GRAND ISLAND PUBLIC WORKS DEPARTMENT	DATE: 12/28/00 DRAWN BY L.D.C. APPVD. BY S.P.R.	SANITARY SEWER SERVICE LINE CONNECTION	PLAN 132