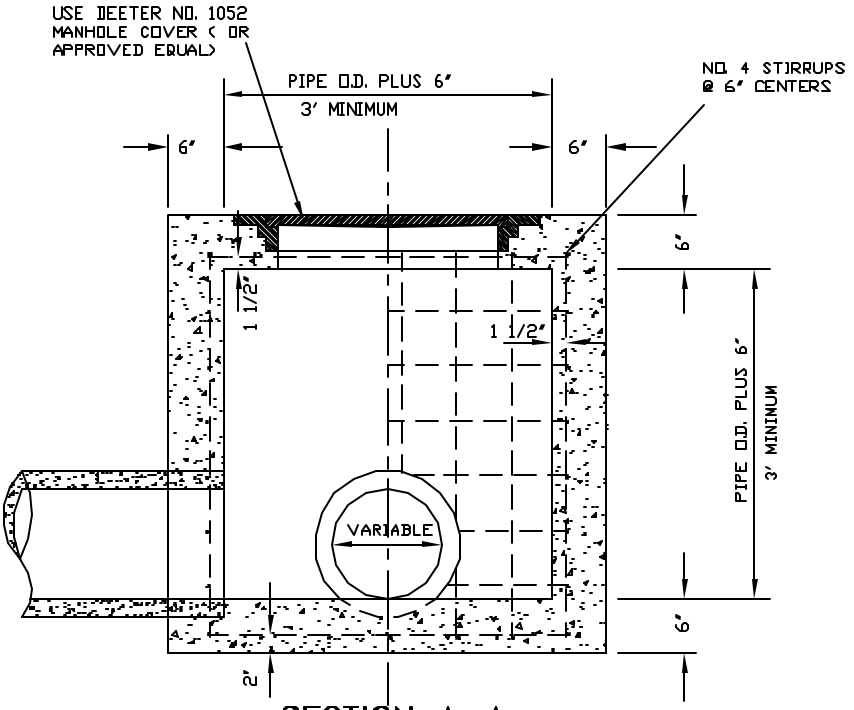

SECTION A–A

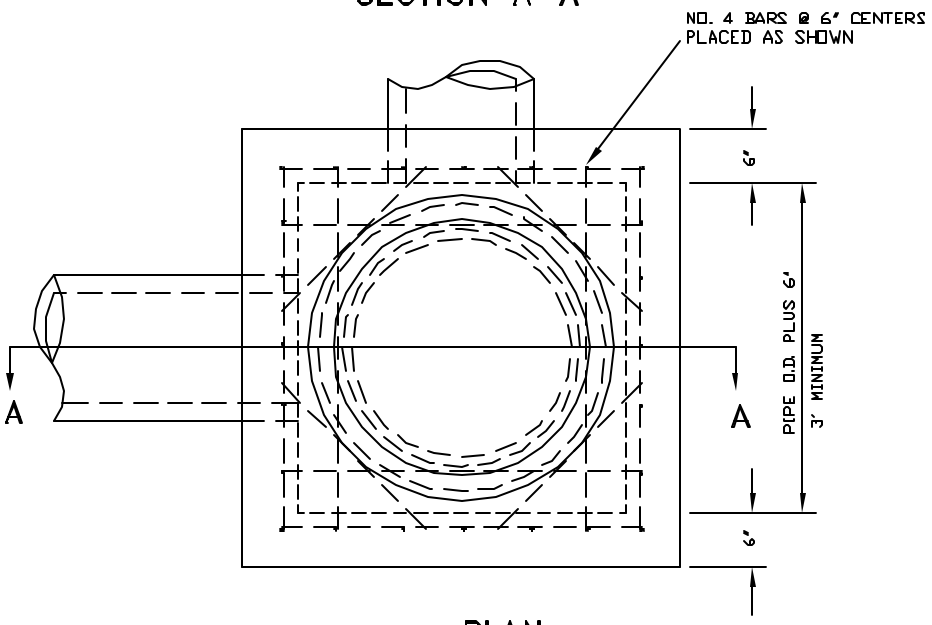

PLAN

REVISED 9/9/81, 9/11/84

CITY OF GRAND ISLAND PUBLIC WORKS DEPARTMENT	DATE: FEB. 1964 DRAWN BY J.V.N. APPVD. BY	JUNCTION BOX	PLAN 128