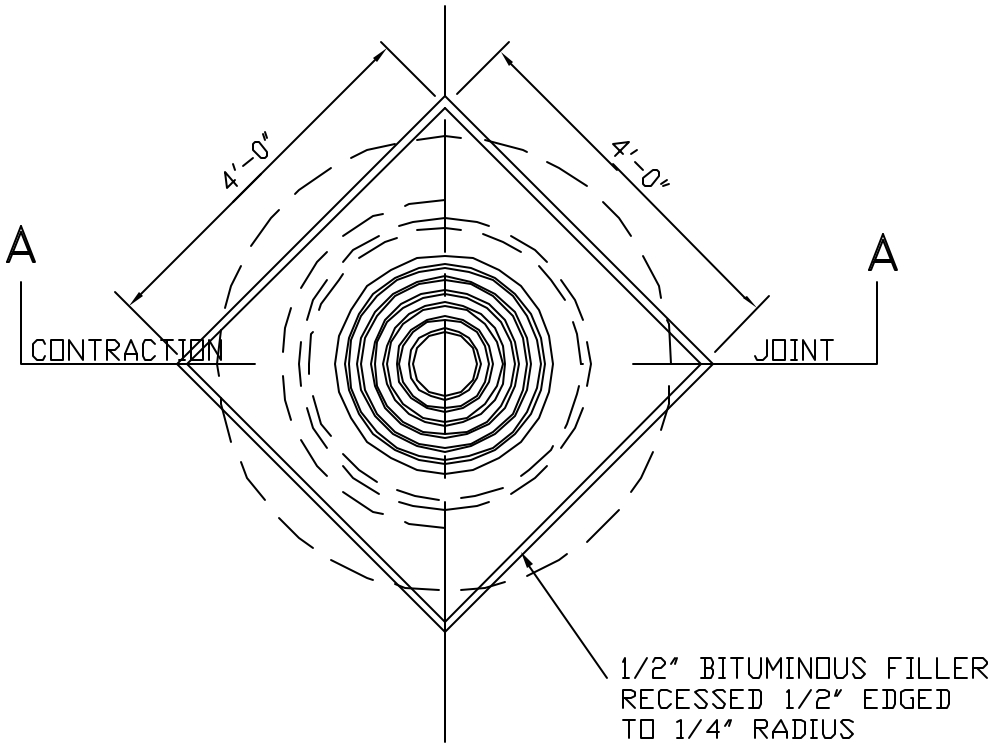

PLAN

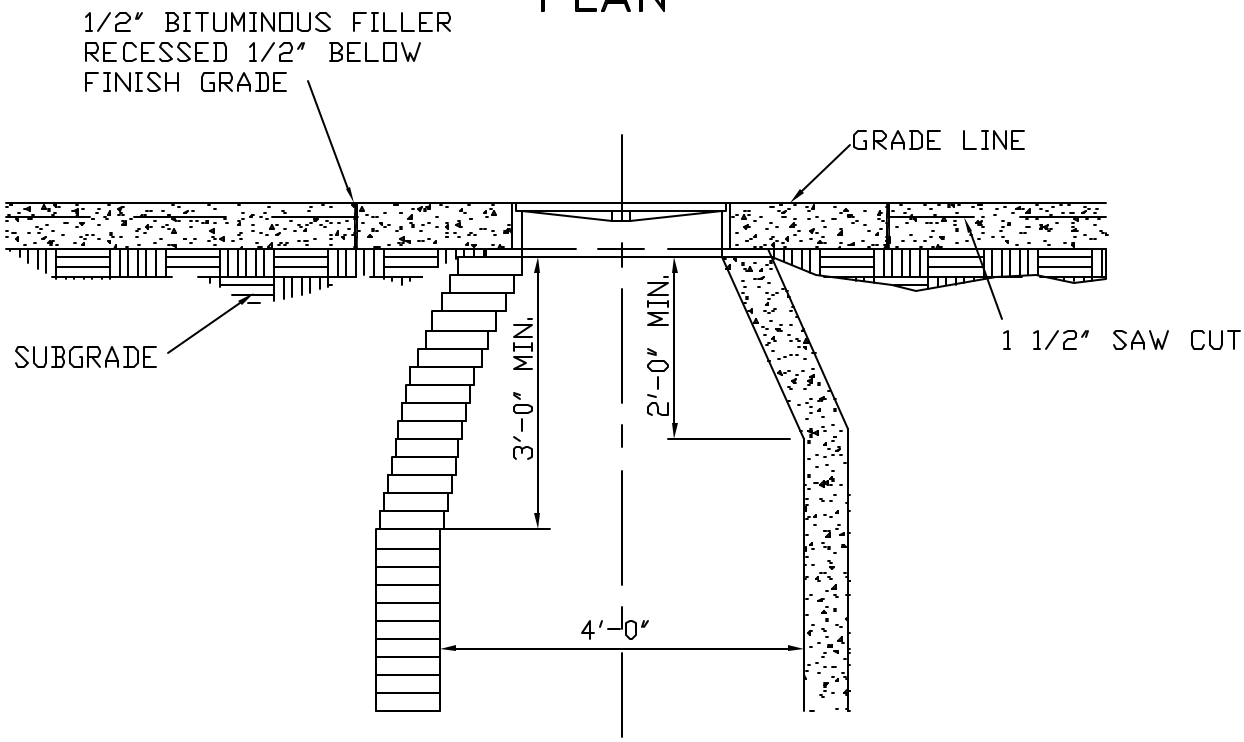

SECTION A-A

CITY OF GRAND ISLAND PUBLIC WORKS DEPARTMENT	DATE: AUG. 1978 DRAWN BY J.R.B. APPVD. BY A.E.R.	STANDARD MANHOLE EXPANSION	PLAN 114 SHEET 2OF2