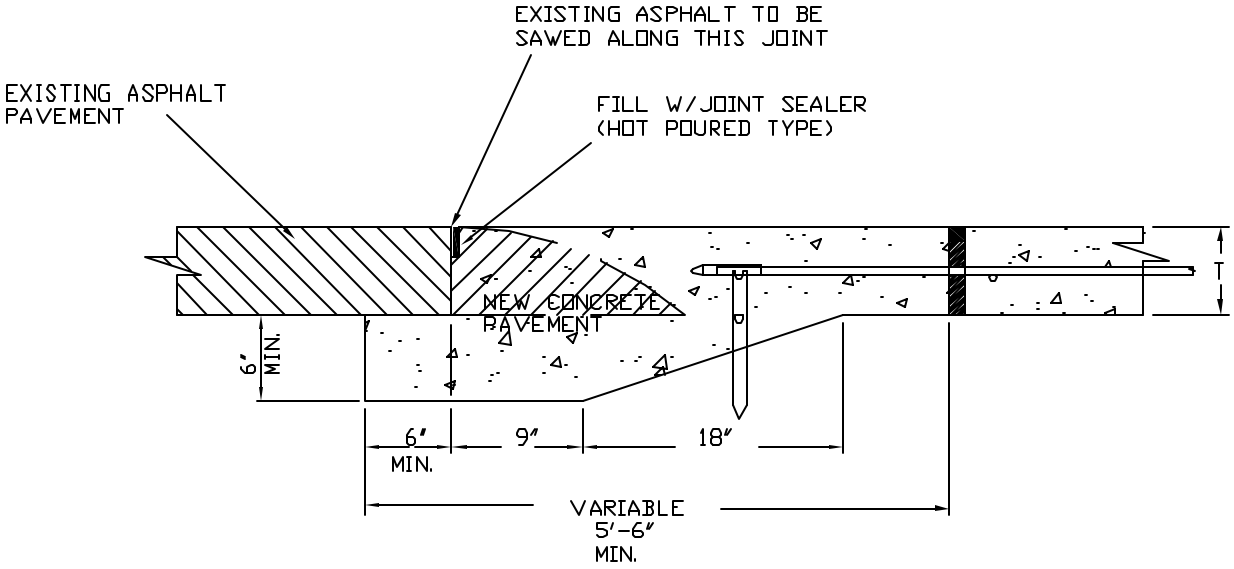

NOTE: THIS JOINT IS TO BE USED WHERE NEW CONCRETE PAVEMENT IS CONNECTED TO EXISTING ASPHALT PAVEMENT.

ALL SAWING AND EXPANSION JOINTS SHALL BE INCIDENTAL TO PAVING.

CITY OF GRAND ISLAND PUBLIC WORKS DEPARTMENT	DATE: DEC. 1962 DRAWN BY J.V.N. APPVD. BY	TRANSVERSE CONSTRUCTION JOINT	PLAN 112