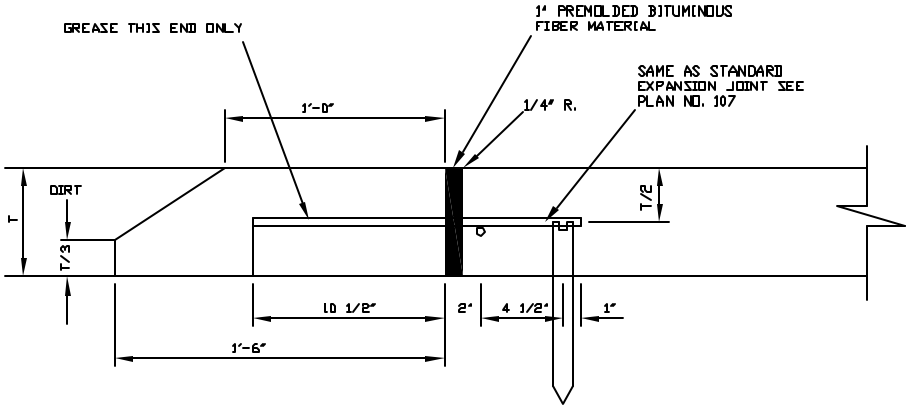

STANDARD CONCRETE HEADER FOR DIRT RETURN

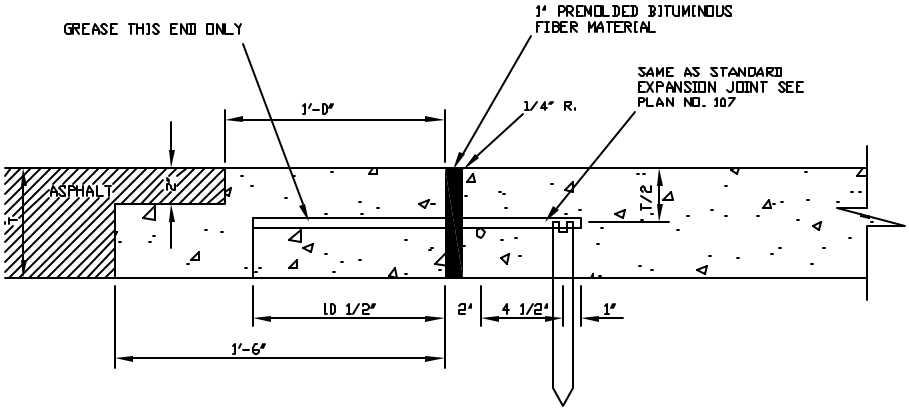

STANDARD CONCRETE HEADER FOR ASPHALT RETURN

CITY OF GRAND ISLAND PUBLIC WORKS DEPARTMENT	DATE: FEB. 1978 DRAWN BY L.D.C. APPVD. BY	STANDARD CONCRETE HEADER	PLAN 108