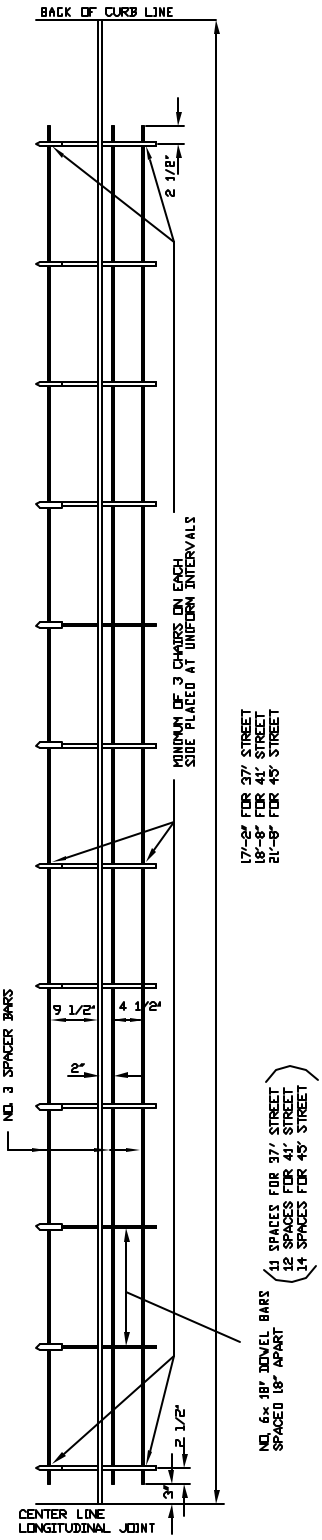

ASSEMBLY PLAN

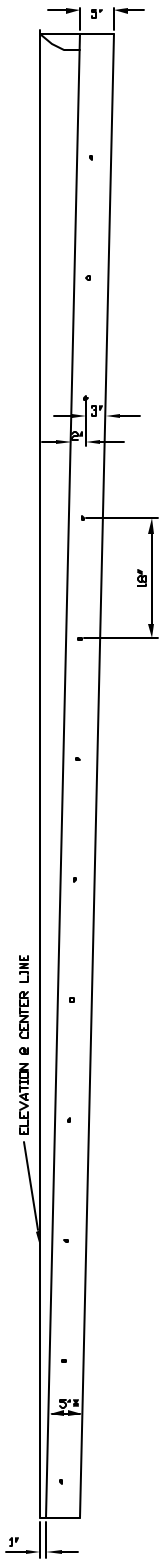

DETAIL FOR CUTTING PREFORMED EXPANSION JOINT FILLER

* DEPTH TO CONFORM TO TYPICAL SECTIONS SHOWN ON PLANS

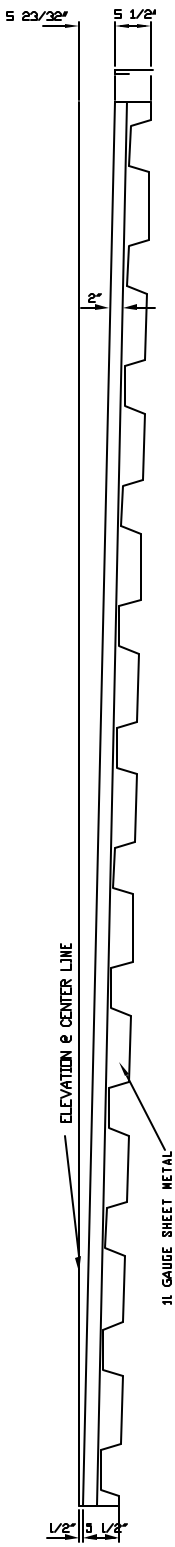

METAL EXPANSION JOINT HOLDER

ALL EXPANSION JOINTS SHALL BE INCIDENTAL TO PAVING

CITY OF GRAND ISLAND
PUBLIC WORKS DEPARTMENT

DATE: APRIL 1971
DRAWN BY L.D.C.
APPVD. BY

STANDARD EXPANSION JOINT ASSEMBLY

PLAN 107