CITY OF GRAND ISLAND

UTILITIES DEPARTMENT

Current Revision: April 4, 2016

# Underground Electrical Standards

Underground

UNDERGROUND

| | |
|---|---|
| EU-1 | RISER CONDUIT INSTALLATION (2 SHEETS) |
| EU-2 | CONDUIT INSTALLATION |
| EU-3 | TRENCH DETAIL |
| EU-4 | TRANSFORMER PAD, 3 PHASE, 75 KVA - 1,000 KVA, (2 SHEETS) |
| EU-5 | TRANSFORMER PAD, 3 PHASE, 1,500 KVA, (2 SHEETS) |
| EU-6 | TRANSFORMER PAD, 1 PHASE (4 SHEETS) |
| EU-7 | TRANSFORMER PAD, 3 PHASE, TYPE 1 PRE-FORMED CONCRETE - 9'X9' |
| EU-8 | TRANSFORMER PAD, 3 PHASE, TYPE 2 PRE-FORMED CONCRETE - 9'X11' |
| EU-9 | PROTECTIVE POSTS |
| EU-10 | 3 PHASE SECTIONALIZER CABINET- CONDUIT INSTALLATION |
| EU-11 | SECTIONALIZER CABINET- DIMENSIONS |
| EU-12 | PULL BOX- SPECIFICATIONS FOR TYPE 1, 2, 3, & 4 |
| EU-13 | PULL BOX- SPECIFICATIONS FOR TYPE 5 |
| EU-14 | PULL BOX CONDUIT INSTALLATION |
| EU-15 | SECONDARY PEDESTAL |
| EU-16 | ELECTRICAL VAULT (2 SHEETS) |
| EU-17 | UTILITY ENCLOSURE; 7' X 4' X 3' DEEP (2 SHEETS) |
| EU-18 | UTILITY ENCLOSURE; 7' X 4' X 6' DEEP (2 SHEETS) |
| EU-19 | UTILITY ENCLOSURE LID; 1 PHASE TRANSFORMER0 TYPE 1 |
| EU-20 | UTILITY ENCLOSURE LID; SOLID- TYPE 2 |
| EU-21 | FIBERGLASS BOX PAD FOR 3 PHASE SWITCH GEAR (3 SHEETS) |
| EU-22 | VOID |
| DU-23 | DEFERRAL CABINET; 1 PHASE |

| PER N.E.C. TABLE 352.30(8) SUPPORT OF RIDGED NONMETALLIC CONDUIT (RNC) | |
|---|---|
| CONDUIT SIZE | MAXIMUM SPACING BETWEEN SUPPORTS |
| 1/2" - 1" | 3 FT. |
| 1-1/4" -2" | 5 FT. |
| 2-1/2" - 3" | 6 FT. |
| 3-1/2" - 5" | 7 FT. |
| 6" | 8 FT. |

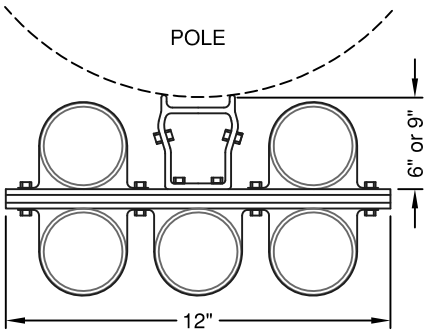


STANDOFF BRACKET WITH T-SLOT
TYPICAL CONDUIT CONFIGURATIONS

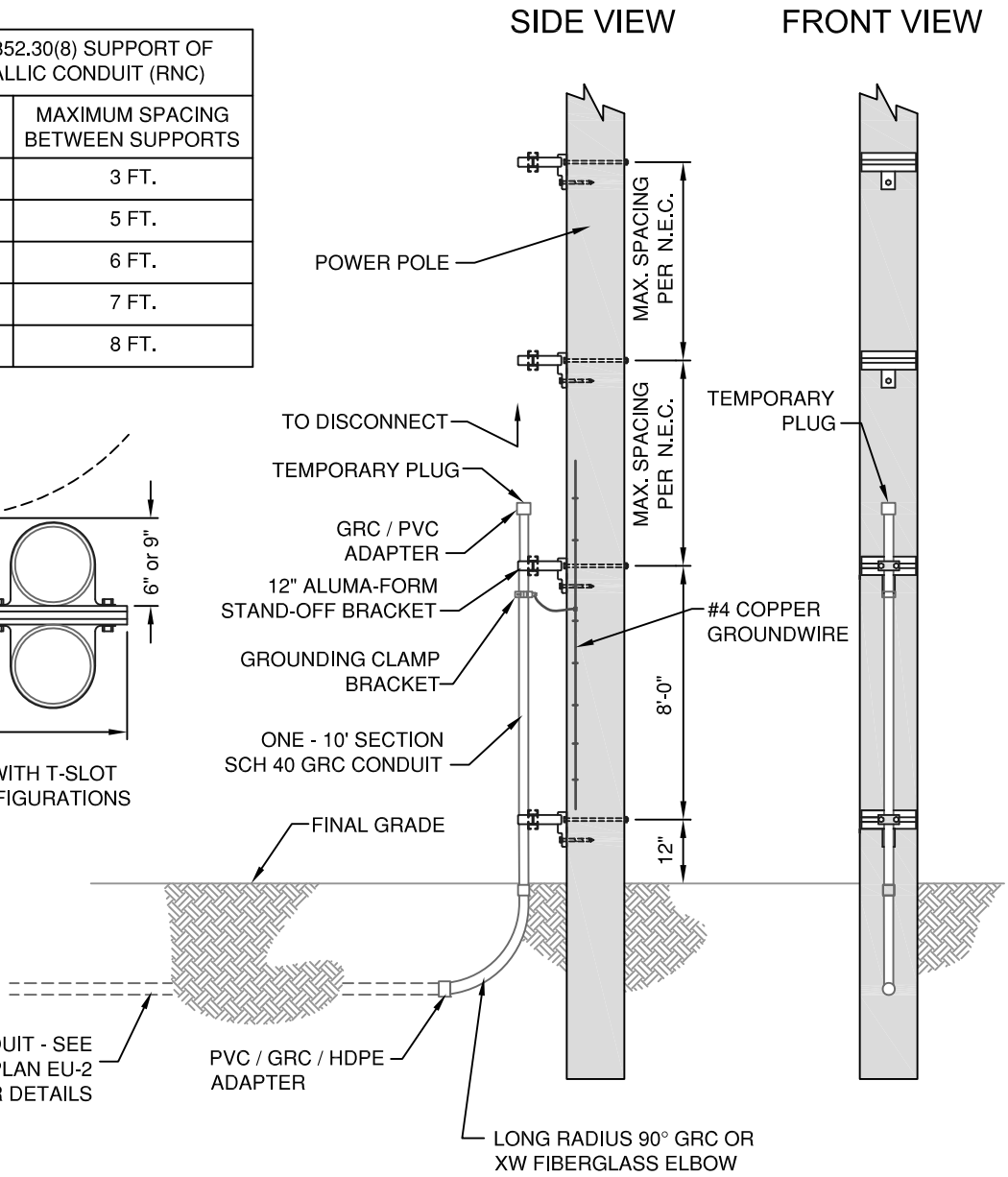


1. THE CONDUIT SHALL EXTEND UP THE RISER POLE ON THE SAME SIDE AS THE UTILITY DEPARTMENT INSTALLED DISCONNECT SWITCH.

2. CONDUIT SHALL BE SUPPORTED TO POLE USING CITY SUPPLIED ALUMA-FORM CONDUIT STANDOFF BRACKETS AND STRAPS.

3. ALL MATERIALS SHALL BE AS LISTED, OR AN APPROVED EQUAL. THE USE OF A BRAND NAME IS FOR THE PURPOSE OF DESCRIBING A STANDARD QUALITY, PERFORMANCE, AND CHARACTERISTIC DESIRED, AND IS NOT INTENDED TO LIMIT OR RESTRICT COMPETITION.

REV: 4/4/16

| | | | |
|---|---|---|---|
| CITY OF GRAND ISLAND UTILITIES DEPARTMENT | DATE: 4/12/1996<br>DRAWN BY: P.S.L.<br>CHECKED BY: T.W.B. | CONDUIT RISER INSTALLATION LOOP FEED | PLAN EU - 1 1 OF 2 |

| PER N.E.C. TABLE 352.30(8) SUPPORT OF RIDGED NONMETALLIC CONDUIT (RNC) | |
|---|---|
| CONDUIT SIZE | MAXIMUM SPACING BETWEEN SUPPORTS |
| 1/2" - 1" | 3 FT. |
| 1-1/4" -2" | 5 FT. |
| 2-1/2" - 3" | 6 FT. |
| 3-1/2" - 5" | 7 FT. |
| 6" | 8 FT. |

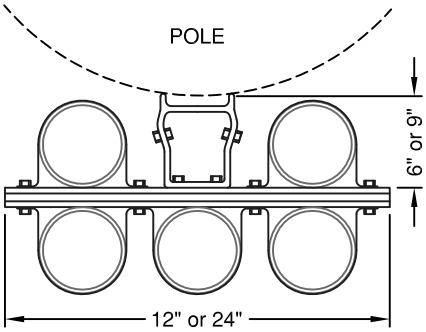


STANDOFF BRACKET WITH T-SLOT
TYPICAL CONDUIT CONFIGURATIONS

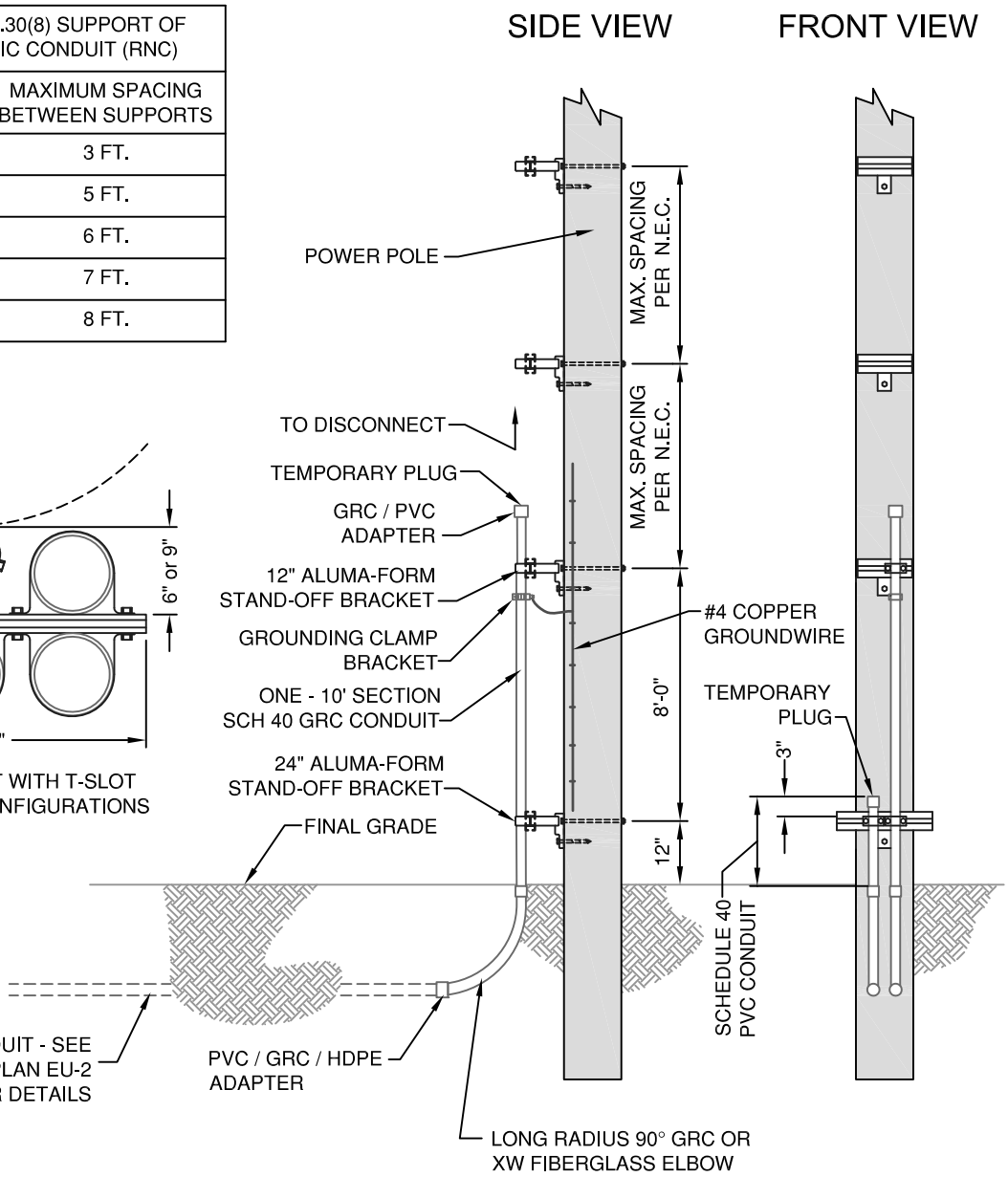


1. THE CONDUIT SHALL EXTEND UP THE RISER POLE ON THE SAME SIDE AS THE UTILITY DEPARTMENT INSTALLED DISCONNECT SWITCH.

2. CONDUIT SHALL BE SUPPORTED TO POLE USING CITY SUPPLIED ALUMA-FORM CONDUIT STANDOFF BRACKETS AND STRAPS.

3. ALL MATERIALS SHALL BE AS LISTED, OR AN APPROVED EQUAL. THE USE OF A BRAND NAME IS FOR THE PURPOSE OF DESCRIBING A STANDARD QUALITY, PERFORMANCE, AND CHARACTERISTIC DESIRED, AND IS NOT INTENDED TO LIMIT OR RESTRICT COMPETITION.

REV: 4/4/16

| | | | |
|---|---|---|---|
| CITY OF GRAND ISLAND UTILITIES DEPARTMENT | DATE: 4/12/1996<br>DRAWN BY: P.S.L.<br>CHECKED BY: T.W.B. | CONDUIT RISER INSTALLATION RADIAL FEED | PLAN EU - 1 2 OF 2 |

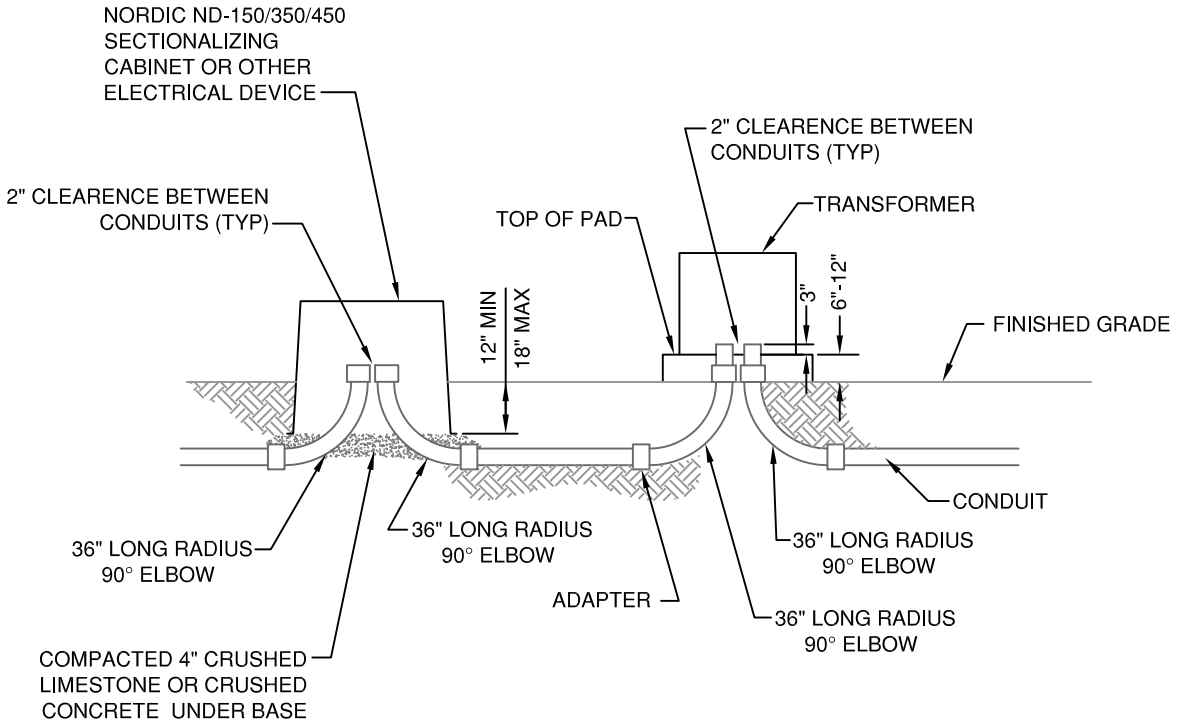


1. LONG RADIUS ELBOW AND ADAPTER MATERIAL TYPE TO BE DETERMINED BY CITY PRIOR TO CONDUIT INSTALLATION. (GRC, SCH. 40 PVC, EXTRA HEAVY-WALLED FIBERGLASS, ETC.)

2. FINISHED GRADE LOCATION TO BE DETERMINED BY CITY PRIOR TO INSTALLATION OF TRANSFORMER, SECTIONALIZING CABINET, OR OTHER ELECTRICAL DEVISE. (TOP OF CURB, FINISHED FLOOR ELEVATION, EXISTING GRADE, ETC.)

3. CONDUIT SHALL BE BEDDED IN SAND, UNLESS OTHERWISE APPROVED BY THE UTILITY DEPARTMENT INSPECTOR.

4. THE UTILITY DEPARTMENT SHALL FURNISH AND THE CONTRACTOR SHALL INSTALL A MARKER TAPE, ALONG AND ABOVE, ALL CONDUIT RUNS.

5. SCHEDULE 40 P.V.C. CONDUIT(S) SHALL BE USED THROUGHOUT ENTIRE PROJECT. USE ONLY CARLON QUICK SET P.V.C. GLUE-#VC9982.

6. H.D.P.E. PIPE MAY BE USED WITH APPROVAL OF THE G.I.U.D. INSTALLATION METHODS SHALL BE APPROVED BY THE G.I.U.D. PRIOR TO BEGINNING PROJECT.

7. ALL MATERIALS SHALL BE AS LISTED, OR AN APPROVED EQUAL. THE USE OF A BRAND NAME IS FOR THE PURPOSE OF DESCRIBING A STANDARD QUALITY, PERFORMANCE, AND CHARACTERISTIC DESIRED, AND IS NOT INTENDED TO LIMIT OR RESTRICT COMPETITION.

REV: 2/29/2012

| | | | |
|---|---|---|---|
| CITY OF GRAND ISLAND UTILITIES DEPARTMENT | DATE: 4/12/1996<br>DRAWN BY: P.S.L.<br>CHECKED BY: T.W.B. | HIGH VOLTAGE CONDUIT INSTALLATION | PLAN EU - 2 |

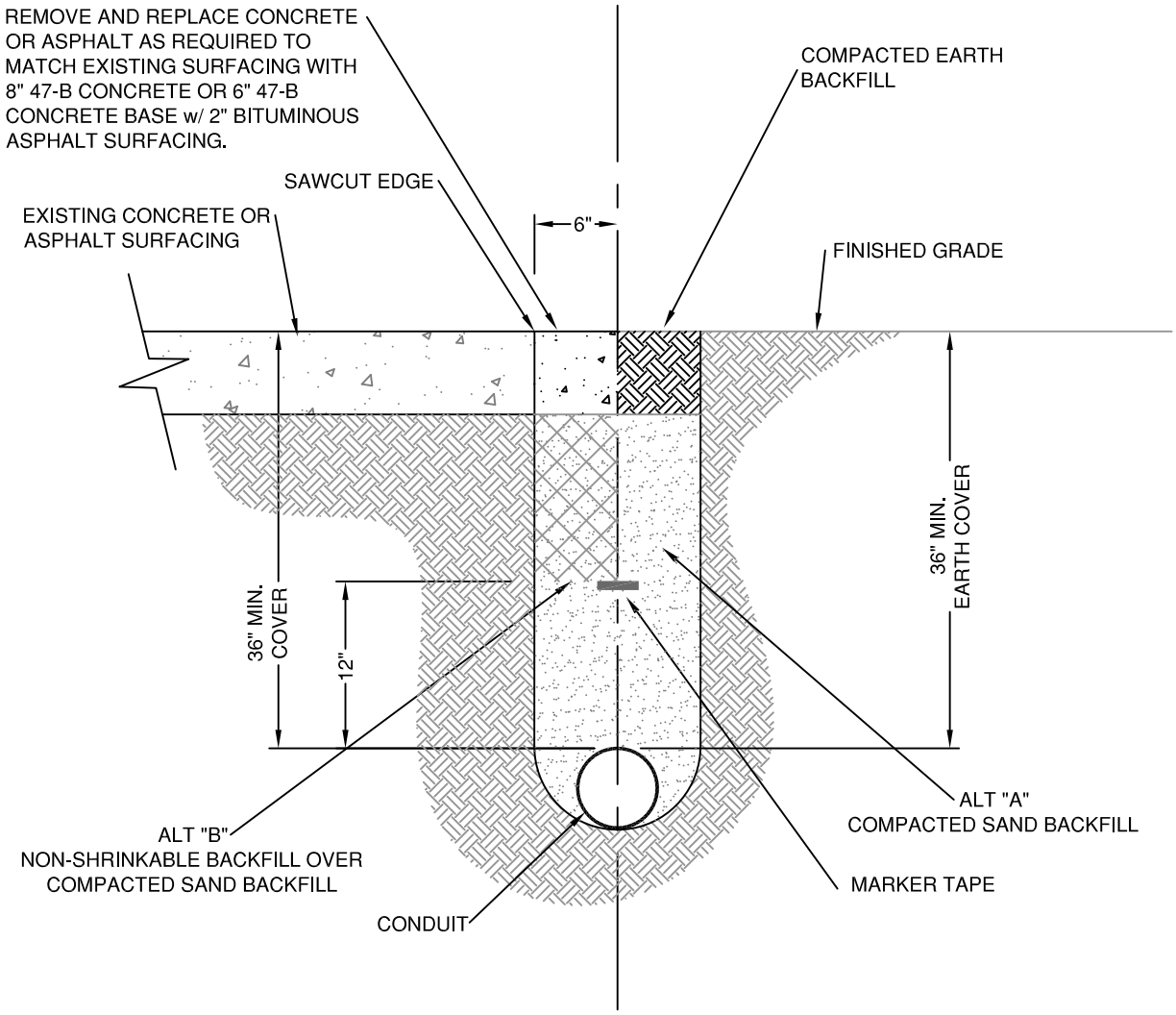


1. CONDUIT TO BE BEDDED IN SAND, UNLESS OTHERWISE APPROVED BY THE UTILITY DEPARTMENT INSPECTOR.
2. THE UTILITY DEPARTMENT SHALL FURNISH AND THE CONTRACTOR SHALL INSTALL A MARKER TAPE, ALONG AND ABOVE, ALL CONDUIT RUNS.
3. ALL BACKFILL METHODS SHALL BE AS APPROVED BY THE UTILITY DEPARTMENT INSPECTOR.
4. THE UTILITY DEPARTMENT INSPECTOR SHALL HAVE OPPORTUNITY TO INSPECT CONDUIT INSTALLATION PRIOR TO BACKFILLING.

REV: 2/29/2012

| | | | |
|---|---|---|---|
| CITY OF GRAND ISLAND UTILITIES DEPARTMENT | DATE: 4/12/1996<br>DRAWN BY: P.S.L.<br>CHECKED BY: T.W.B. | TRENCH DETAIL | PLAN EU - 3 |

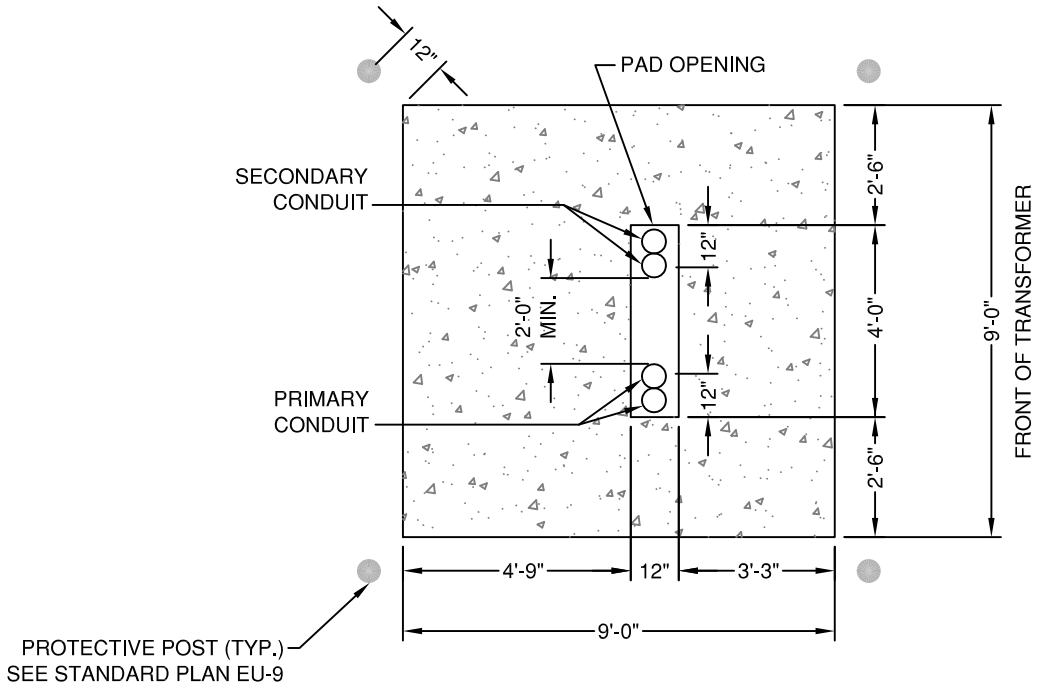


# TRANSFORMER PAD

1. TRANSFORMER PADS TO BE TYPE 47-B MODIFIED CONCRETE AS PER CITY SPECIFICATIONS SECTION 2, DIVISION 2. PAD TO BE 12" THICK, REINFORCED WITH 6"x6"-6 GAUGE WIRE MESH OR #4 RE-BAR AS PER STANDARD PLAN EU-4, SHEET 2 OF 2.

2. TOP OF PAD TO BE SAME ELEVATION OF FINISHED FLOOR OR AS SPECIFIED BY UTILITY DEPARTMENT. ALL FORMS AND REINFORCING SHALL BE INSPECTED BY CITY ELECTRIC DEPARTMENT PRIOR TO PLACEMENT OF CONCRETE.

3. ELECTRICAL CONTRACTOR SHALL INSTALL CONCRETE FILLED PROTECTIVE POSTS AT EACH CORNER OF TRANSFORMER PAD. PROTECTIVE POSTS SHALL BE 3'-8" ABOVE AND 3 FEET BELOW FINISHED GRADE AS PER STANDARD PLAN EU-9. PROTECTIVE POSTS ARE TO PROTECT TRANSFORMER FROM TRAFFIC AND SHALL BE INSTALLED PRIOR TO THE SETTING OF TRANSFORMER BY UTILITY DEPARTMENT.

4. A MINIMUM OF 10 FEET SHALL BE MAINTAINED BETWEEN THE TRANSFORMER AND ANY STRUCTURE.

5. FRONT OF TRANSFORMER TO FACE _____ .

REVISED: 3/6/2012

| | | | |
|---|---|---|---|
| CITY OF GRAND ISLAND UTILITIES DEPARTMENT | DATE: 4/12/1996<br>DRAWN BY: P.S.L.<br>CHECKED BY: T.W.B. | 75-1000 KVA<br>3Ø TRANSFORMER<br>PAD | PLAN<br>EU - 4<br>1 OF 2 |

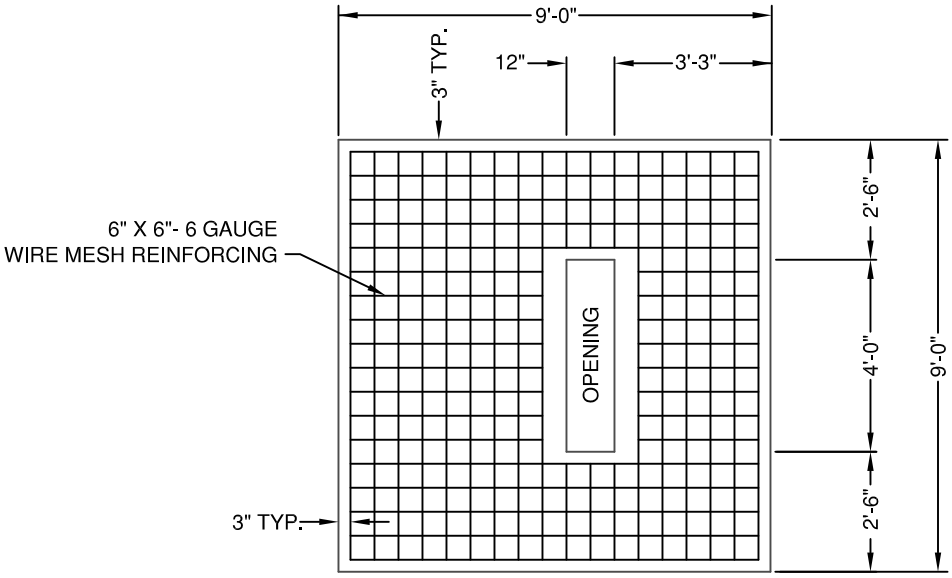


DETAIL "A"

6" x 6"- 6 GAUGE WIRE MESH

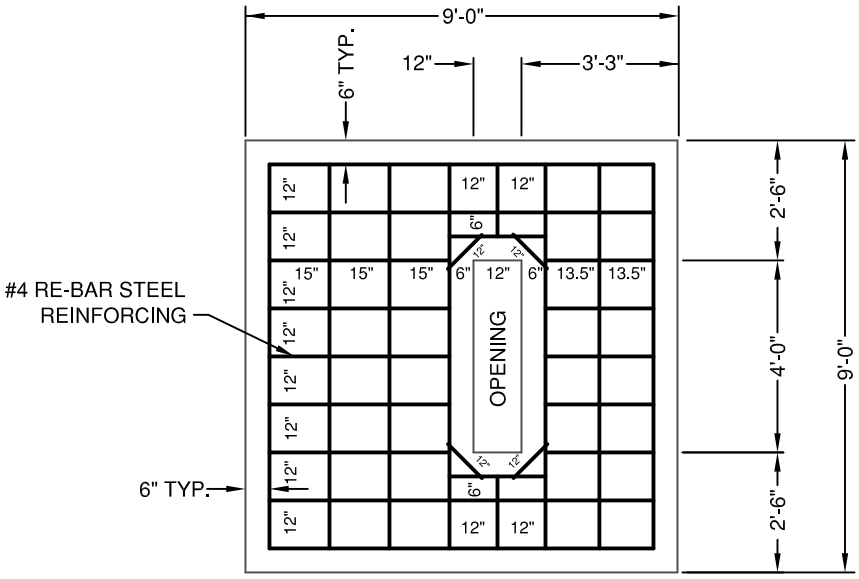


DETAIL "B"

#4 RE-BAR

1. TRANSFORMER PADS TO BE TYPE 47-B MODIFIED CONCRETE AS PER CITY SPECIFICATIONS SECTION 2, DIVISION 2. PAD TO BE 12" THICK, REINFORCED WITH 6"x6"-6 GAUGE WIRE MESH (DETAIL "A") OR #4 RE-BAR (DETAIL "B").

2. TOP OF PAD TO BE 6" ABOVE FINISHED GRADE. ALL FORMS AND REINFORCING SHALL BE INSPECTED BY CITY ELECTRIC DEPARTMENT PRIOR TO PLACEMENT OF CONCRETE.

4. STEEL REINFORCING TO BE SUSPENDED 6" FROM SUB GRADE OF TRANSFORMER PAD.

5. ALL RE-BAR INTERSECTION CROSSINGS TO BE WIRE TIED TOGETHER.

REVISED: 3/5/2012

| | | | |
|---|---|---|---|
| CITY OF GRAND ISLAND UTILITIES DEPARTMENT | DATE: 3/5/2012<br>DRAWN BY: K.J.M.<br>CHECKED BY: T.W.B. | 75-1000 KVA 3Ø TRANSFORMER PAD REINFORCING | PLAN EU - 4 2 OF 2 |

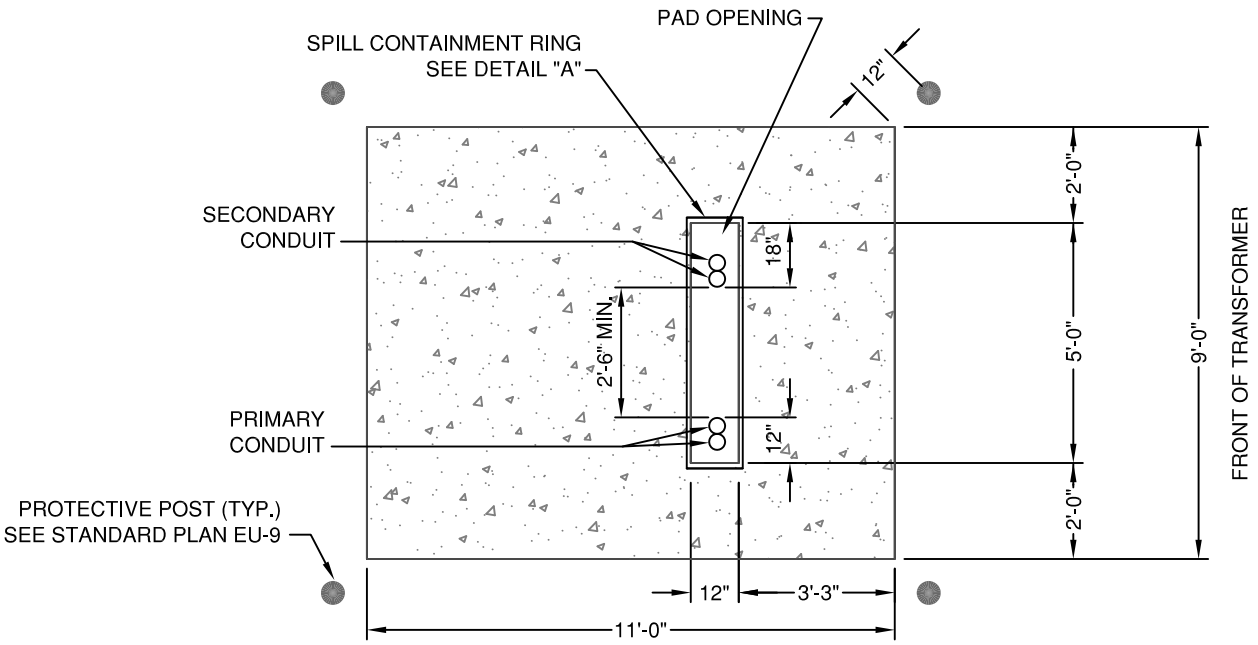


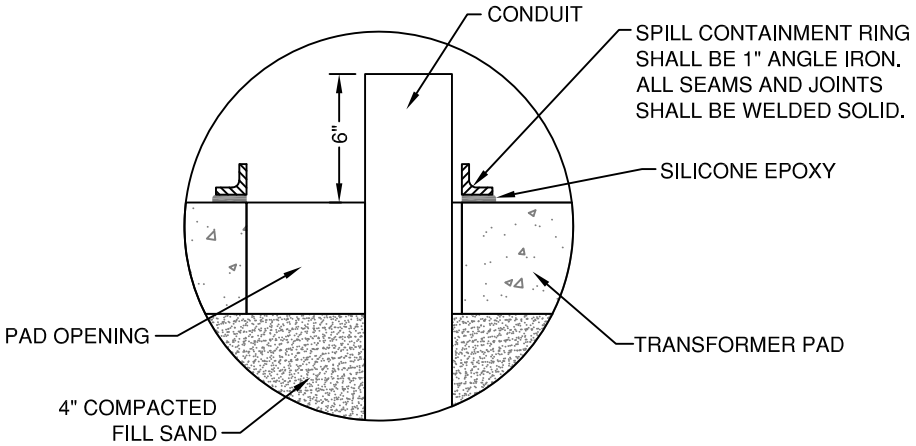


DETAIL "A"

1. SERVICE TO BE _____ V.A.C.

2. TRANSFORMER PADS TO BE TYPE 47-B MODIFIED CONCRETE AS PER CITY SPECIFICATIONS SECTION 2, DIVISION 2. PAD TO BE 12" THICK, REINFORCED WITH 6"x6"-6 GAUGE WIRE MESH OR #4 RE-BAR AS PER STANDARD PLAN EU-5, SHEET 2 OF 2.

3. TOP OF PAD TO BE SAME ELEVATION OF FINISHED FLOOR OR AS SPECIFIED BY UTILITY DEPARTMENT. ALL FORMS AND REINFORCING SHALL BE INSPECTED BY CITY ELECTRIC DEPARTMENT PRIOR TO PLACEMENT OF CONCRETE.

4. ELECTRICAL CONTRACTOR SHALL INSTALL CONCRETE FILLED PROTECTIVE POSTS AT EACH CORNER OF TRANSFORMER PAD. PROTECTIVE POSTS SHALL BE 3'-8" ABOVE AND 3 FEET BELOW FINISHED GRADE AS PER STANDARD PLAN EU-9. PROTECTIVE POSTS ARE TO PROTECT TRANSFORMER FROM TRAFFIC AND SHALL BE INSTALLED PRIOR TO THE SETTING OF TRANSFORMER BY UTILITY DEPARTMENT.

5. A MINIMUM OF 10 FEET SHALL BE MAINTAINED BETWEEN THE TRANSFORMER AND ANY STRUCTURE.

6. FRONT OF TRANSFORMER TO FACE _____ .

REVISED: 3/6/2012

| | | | |
|---|---|---|---|
| CITY OF GRAND ISLAND UTILITIES DEPARTMENT | DATE: 4/12/1996<br>DRAWN BY: P.S.L.<br>CHECKED BY: T.W.B. | 1500-2500 KVA<br>3Ø TRANSFORMER<br>PAD | PLAN<br>EU - 5<br>1 OF 2 |

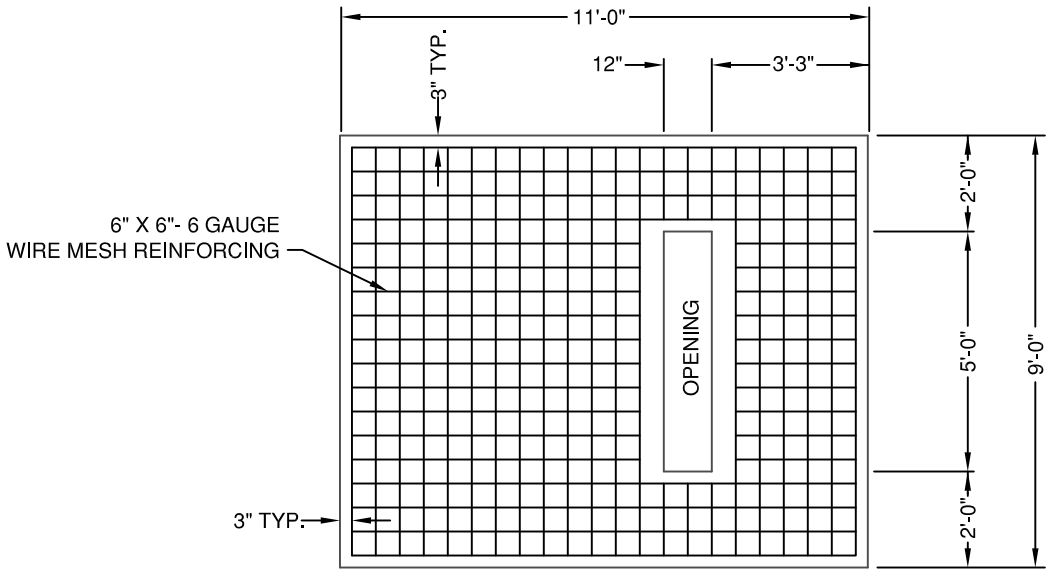


DETAIL "A"

6" x 6"- 6 GAUGE WIRE MESH

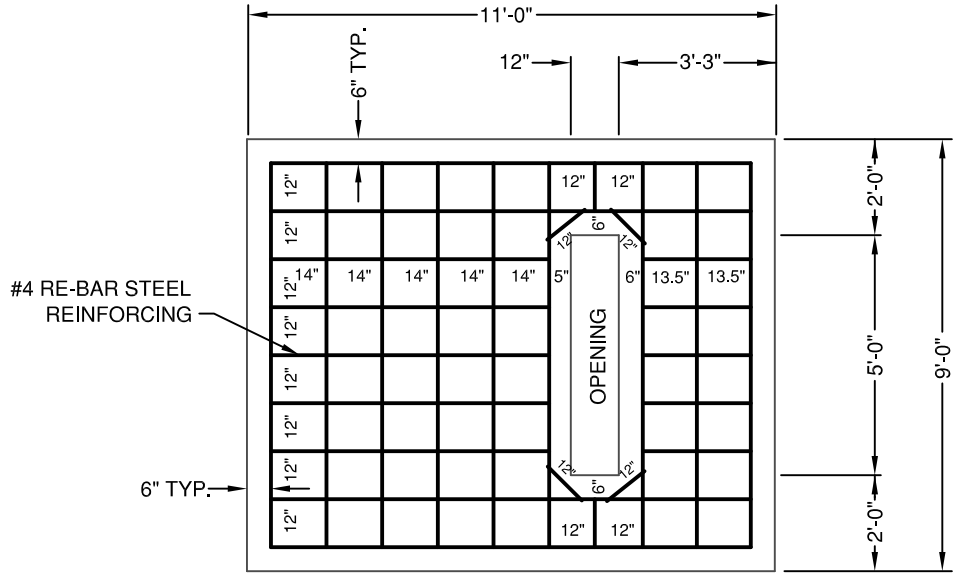


DETAIL "B"

#4 RE-BAR

1. TRANSFORMER PADS TO BE TYPE 47-B MODIFIED CONCRETE AS PER CITY SPECIFICATIONS SECTION 2, DIVISION 2. PAD TO BE 12" THICK, REINFORCED WITH 6"x6"-6 GAUGE WIRE MESH (DETAIL "A") OR #4 RE-BAR (DETAIL "B").

2. TOP OF PAD TO BE 6" ABOVE FINISHED GRADE. ALL FORMS AND REINFORCING SHALL BE INSPECTED BY CITY ELECTRIC DEPARTMENT PRIOR TO PLACEMENT OF CONCRETE.

4. STEEL REINFORCING TO BE SUSPENDED 6" FROM SUB GRADE OF TRANSFORMER PAD.

5. ALL RE-BAR INTERSECTION CROSSINGS TO BE WIRE TIED TOGETHER.

REVISED: 3/5/2012

| | | | |
|---|---|---|---|
| CITY OF GRAND ISLAND UTILITIES DEPARTMENT | DATE: 3/5/2012<br>DRAWN BY: K.J.M.<br>CHECKED BY: T.W.B. | 1500-2500 KVA 3Ø TRANSFORMER PAD REINFORCING | PLAN EU - 5 2 OF 2 |

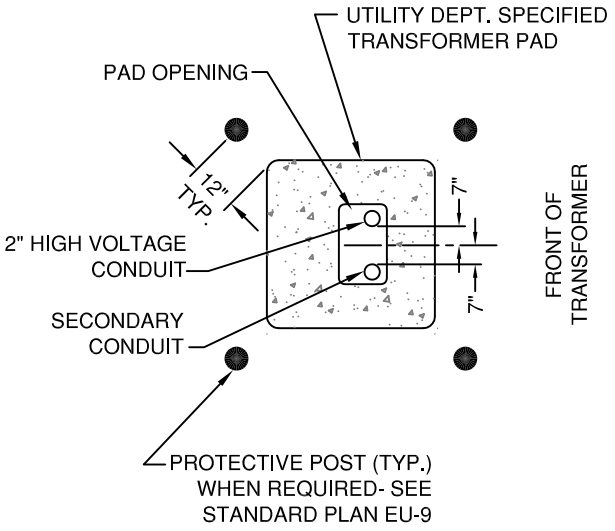


120/240 V.A.C.
1 PHASE LOW PROFILE
DEAD FRONT
TRANSFORMER PAD

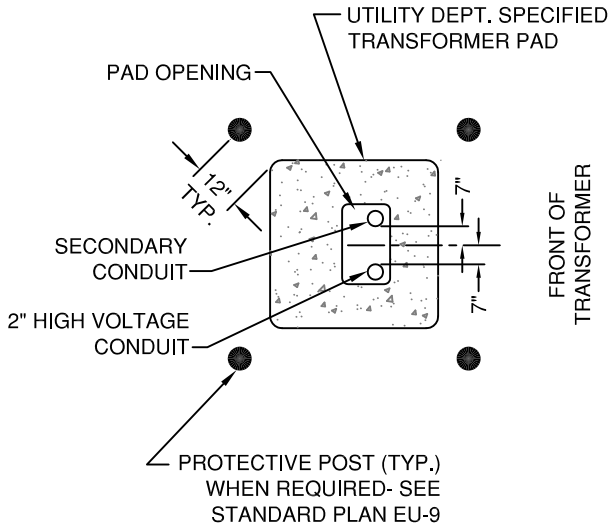


120/240 V.A.C.
1 PHASE STANDARD
DEAD FRONT
TRANSFORMER PAD

1. ELECTRICAL CONTRACTOR SHALL INSTALL CONCRETE FILLED PROTECTIVE POSTS AT EACH CORNER OF TRANSFORMER PAD. PROTECTIVE POSTS SHALL BE 3'-8" ABOVE AND 3 FEET BELOW FINISHED GRADE AS PER STANDARD PLAN EU-9. PROTECTIVE POSTS ARE TO PROTECT TRANSFORMER FROM TRAFFIC AND SHALL BE INSTALLED PRIOR TO THE SETTING OF TRANSFORMER BY UTILITY DEPARTMENT.

2. A MINIMUM OF 10 FEET SHALL BE MAINTAINED BETWEEN THE TRANSFORMER AND ANY STRUCTURE.

3. FRONT OF TRANSFORMER TO FACE _____ .

4. ALL MATERIALS SHALL BE AS LISTED, OR AN APPROVED EQUAL. THE USE OF A BRAND NAME IS FOR THE PURPOSE OF DESCRIBING A STANDARD QUALITY, PERFORMANCE, AND CHARACTERISTIC DESIRED, AND IS NOT INTENDED TO LIMIT OR RESTRICT COMPETITION.

REVISED: 8/20/2013

| | | | |
|---|---|---|---|
| CITY OF GRAND ISLAND UTILITIES DEPARTMENT | DATE: 8/20/2013<br>DRAWN BY: P.F.G.<br>CHECKED BY: T.W.B. | 1Ø TRANSFORMER PAD CONDUIT LOCATIONS | PLAN EU - 6 1 of 4 |

## DIMENSIONS

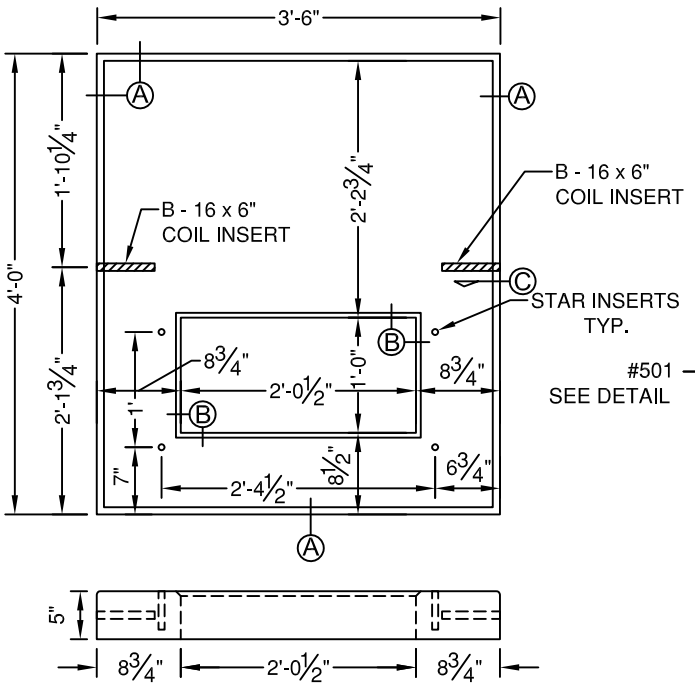


## REBAR LAYOUT

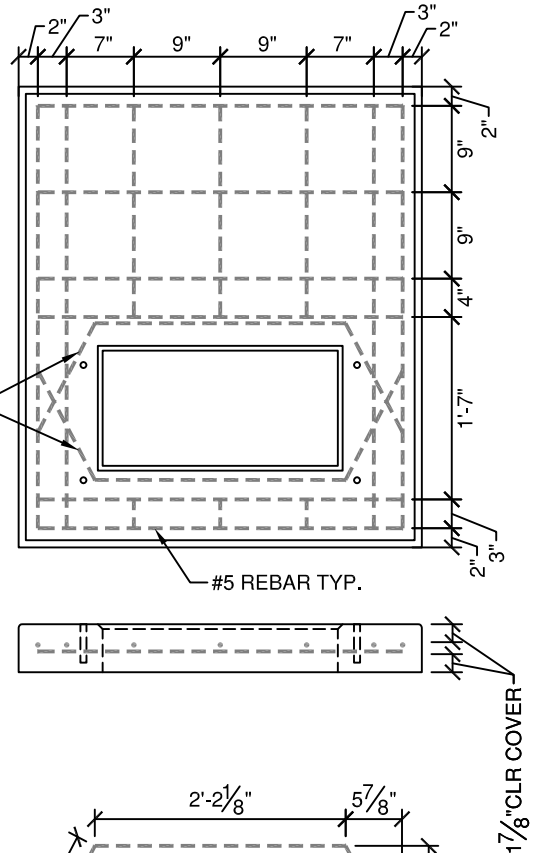


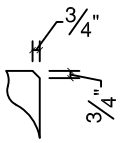


DETAIL A

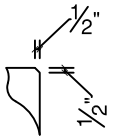


DETAIL B

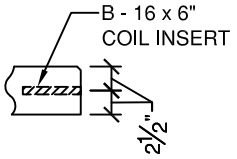


SECTION C

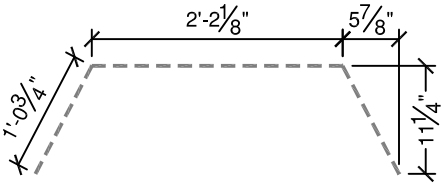


#501 DETAIL

| MATERIALS | | |
|---|---|---|
| DESCRIPTION | UNIT | QUANTITIES |
| 5/8"dia. X 2" Star Insert | EA. | 4 |
| B - 16 x 6" Coil Insert | EA. | 2 |
| #5 x 1' - 0" Rebar | EA. | 4 |
| #5 x 3' - 2" Rebar | EA. | 7 |
| #5 x 3' - 8" Rebar | EA. | 8 |
| #501 Rebar (SEE DETAIL) | EA. | 2 |

| | | | |
|---|---|---|---|
| CITY OF GRAND ISLAND UTILITIES DEPARTMENT | DATE: 8/30/2013<br>DRAWN BY: P.F.G.<br>CHECKED BY: T.W.B. | 1Ø TRANSFORMER PAD PRE-FORMED CONCRETE | PLAN EU - 6 2 of 4 |

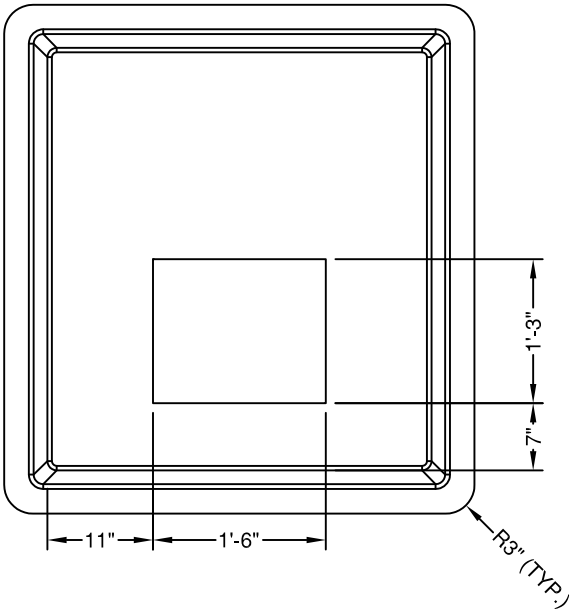


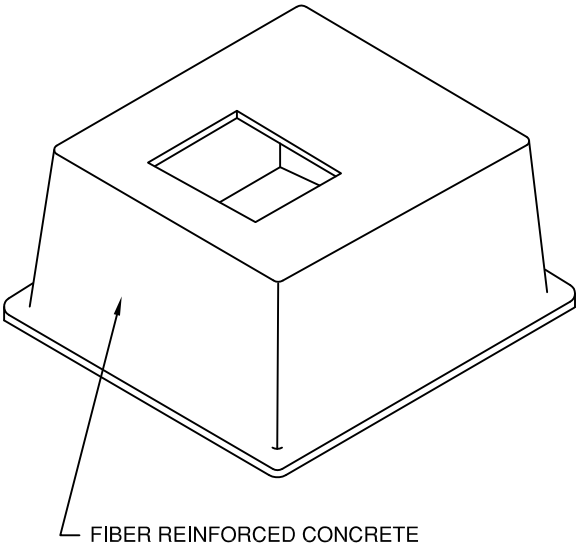


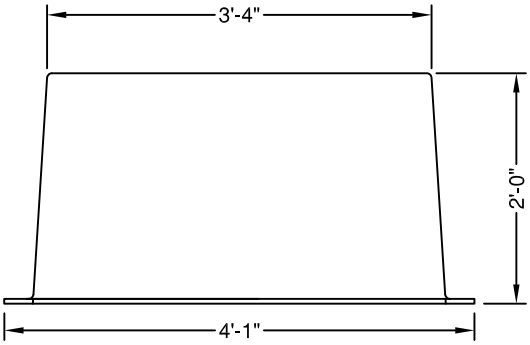


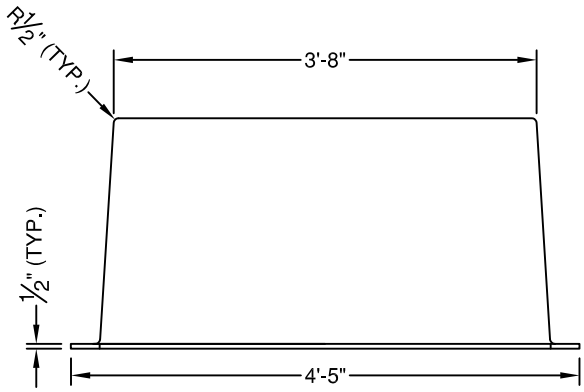


| | | | |
|---|---|---|---|
| CITY OF GRAND ISLAND UTILITIES DEPARTMENT | DATE: 8/20/2013<br>DRAWN BY: P.F.G.<br>CHECKED BY: T.W.B. | 1Ø TRANSFORMER PAD<br>CONCAST®<br>FIBERCRETE BOX PAD<br>FC-40-44-24-1815(7) | PLAN<br>EU - 6<br>3 of 4 |

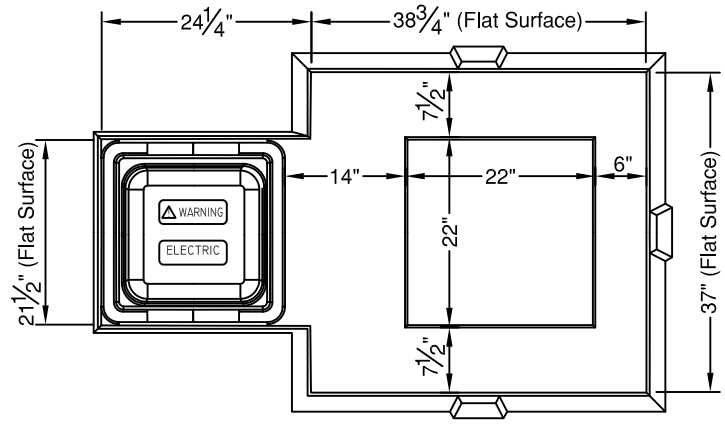


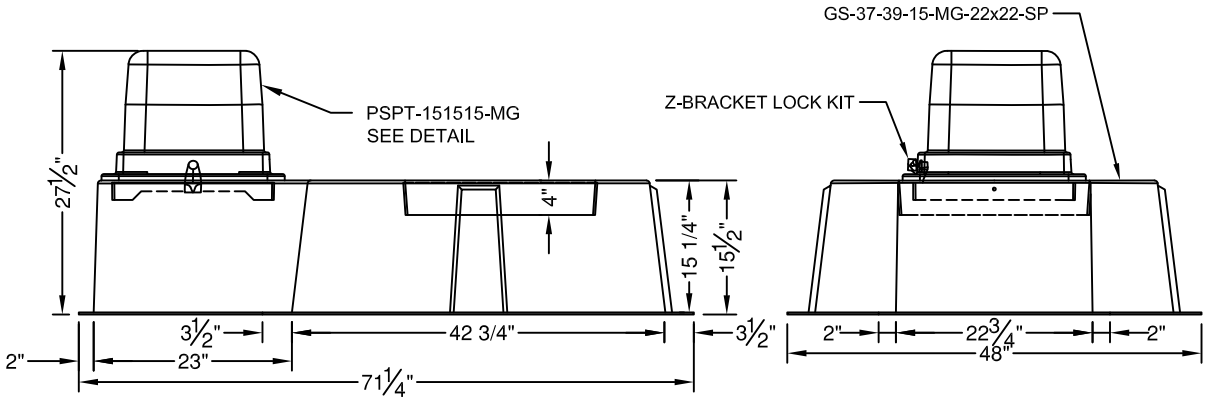


PSPT-151515-MG DETAIL

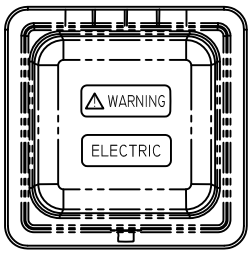


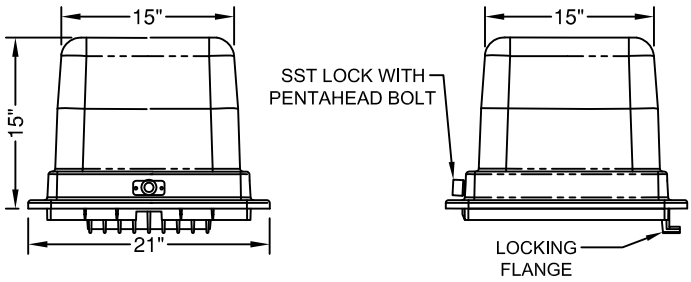


OPTIONAL PLASTIC
BRACKETS W/CONNECTORS

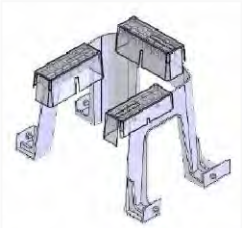

99-PSP-CB-15-L6350

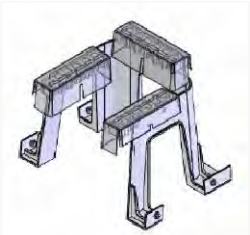

99-PSP-CB-15-L6600

| | | | |
|---|---|---|---|
| CITY OF GRAND ISLAND UTILITIES DEPARTMENT | DATE: 8/20/2013<br>DRAWN BY: P.F.G.<br>CHECKED BY: T.W.B. | 1Ø TRANSFORMER PAD<br>NORDIC FIBERGLASS, INC.<br>GS-37-39-15-SP-MG-22X22 | PLAN<br>EU - 6<br>4 of 4 |

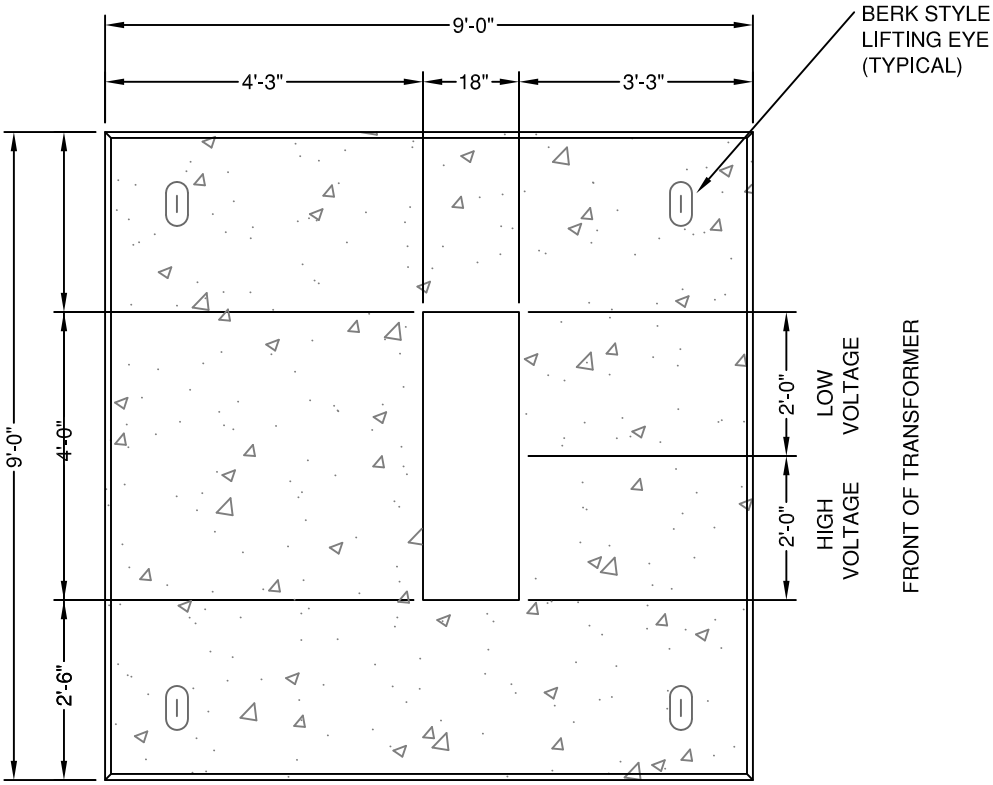


NOTES:

1. ALL TRANSFORMER PADS SHALL BE TYPE 47-B MODIFIED REINFORCED CONCRETE - 12" THICK.

2. ALL MATERIALS SHALL BE AS LISTED, OR AN APPROVED EQUAL. THE USE OF A BRAND NAME IS FOR THE PURPOSE OF DESCRIBING A STANDARD QUALITY, PERFORMANCE, AND CHARACTERISTIC DESIRED, AND IS NOT INTENDED TO LIMIT OR RESTRICT COMPETITION.

REV: 2/28/2005 PFG

| | | | |
|---|---|---|---|
| CITY OF GRAND ISLAND UTILITIES DEPARTMENT | DATE: 10/2/2002<br>DRAWN BY: ZEC<br>CHECKED BY: T.W.B. | 3Ø PRE-FORMED TRANSFORMER PAD - TYPE 1 | PLAN EU - 7 |

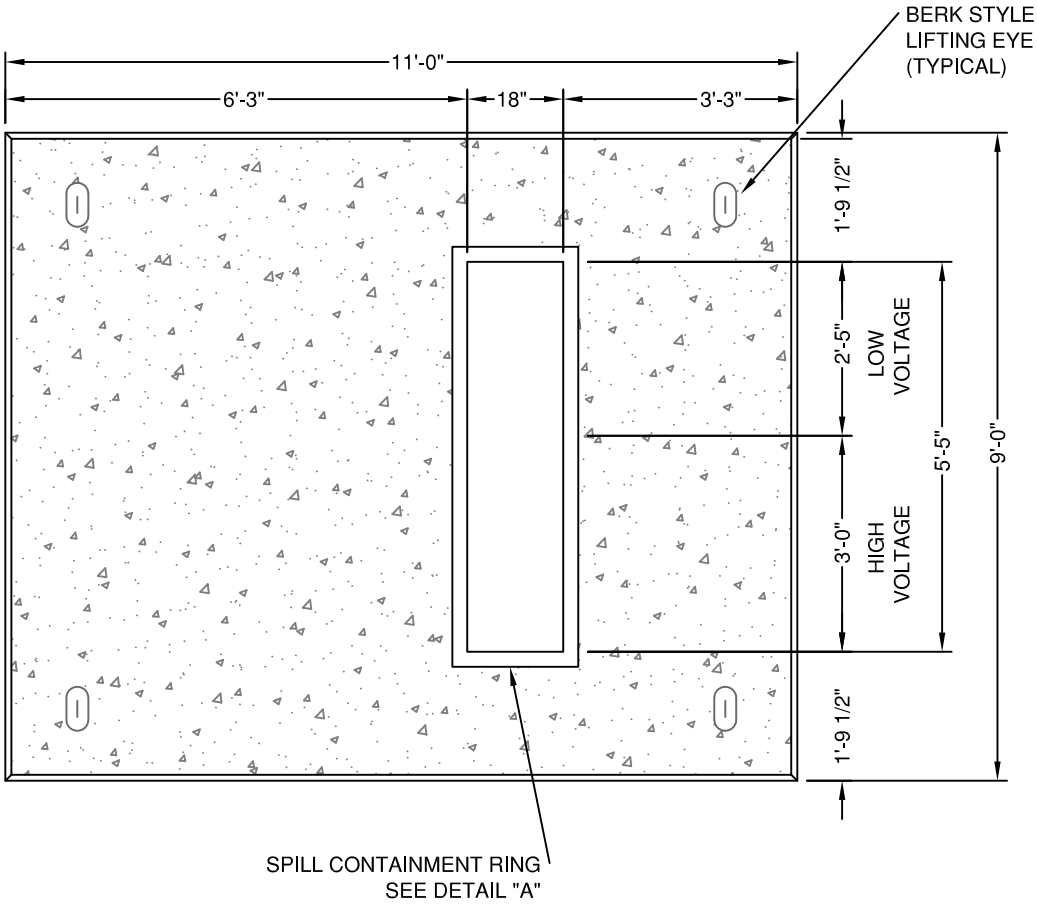


DETAIL "A"

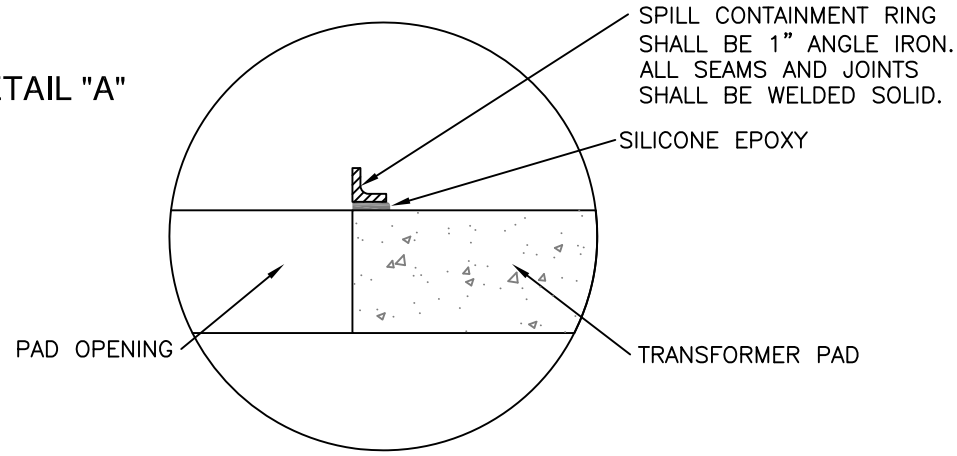


NOTES:

1. ALL TRANSFORMER PADS SHALL BE TYPE 47-B MODIFIED REINFORCED CONCRETE - 12" THICK.

2. ALL MATERIALS SHALL BE AS LISTED, OR AN APPROVED EQUAL. THE USE OF A BRAND NAME IS FOR THE PURPOSE OF DESCRIBING A STANDARD QUALITY, PERFORMANCE, AND CHARACTERISTIC DESIRED, AND IS NOT INTENDED TO LIMIT OR RESTRICT COMPETITION.

REV: 2/28/2005 PFG
REV: 6/5/2003

| | | | |
|---|---|---|---|
| CITY OF GRAND ISLAND UTILITIES DEPARTMENT | DATE: 10/2/2002<br>DRAWN BY: ZEC<br>CHECKED BY: T.W.B. | 3Ø PRE-FORMED TRANSFORMER PAD - TYPE 2 | PLAN EU - 8 |

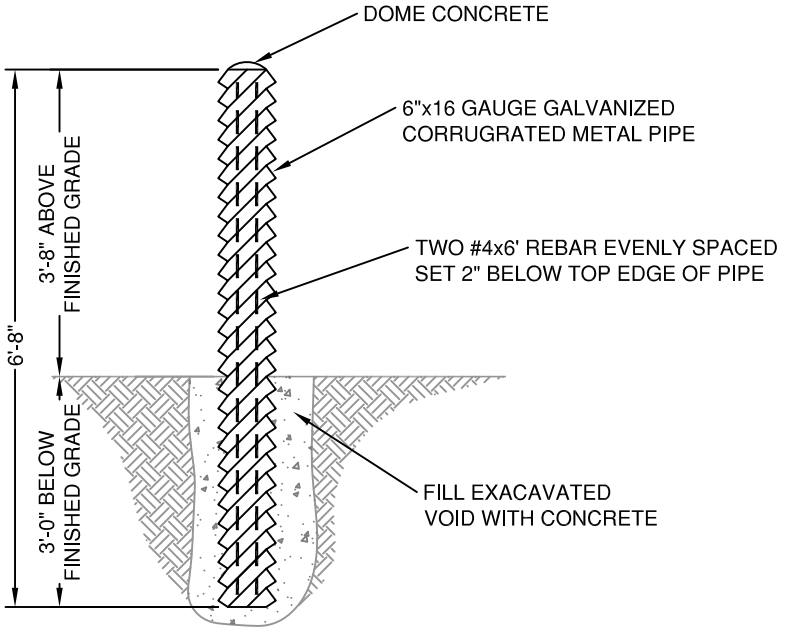


TYPE 47-B CONCRETE REQUIRED
VOLUME-1.4 CU. FT.
FILLED WT.-APPROX. 235 LBS. EA.

ELECTRICAL CONTRACTOR SHALL INSTALL CONCRETE FILLED PROTECTIVE POSTS AT EACH CORNER OF TRANSFORMER PAD, SECTIONALIZER, AND VAULT, OR AS OTHERWISE DIRECTED BY THE UTILITY DEPARTMENT. PROTECTIVE POSTS SHALL BE 3'-8" ABOVE AND 3 FEET BELOW FINISHED GRADE. POSTS ARE TO PROTECT ELECTRICAL INFRUSTRUCTURE FROM TRAFFIC AND SHALL NOT INTERFERE WITH DOOR OPENINGS. POSTS SHALL BE INSTALLED PRIOR TO THE TRANSFORMER BEING SET.

REV. 6/5/2003
REV. 4/25/2001
REV. 2/2000

| | | | |
|---|---|---|---|
| CITY OF GRAND ISLAND UTILITIES DEPARTMENT | DATE: 4/12/1996<br>DRAWN BY: P.S.L.<br>CHECKED BY: T.W.B. | PROTECTIVE POST | PLAN EU - 9 |

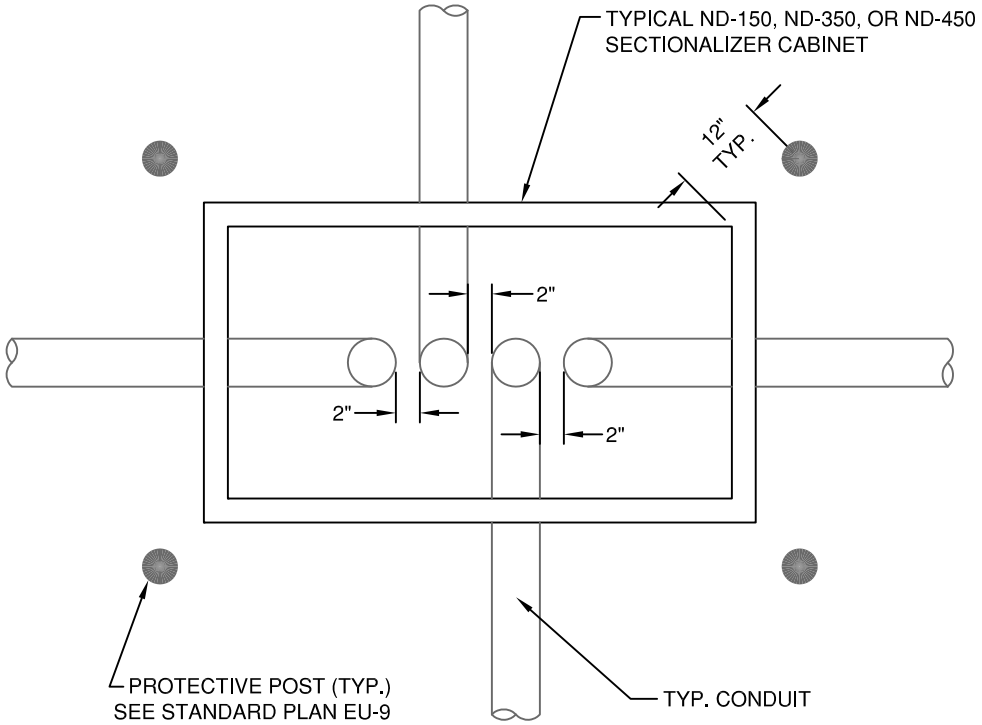


NOTES:

1. ELECTRICAL CONTRACTOR SHALL INSTALL CONCRETE FILLED PROTECTIVE POSTS AT EACH CORNER OF SECTIONALIZER **AFTER** UTILITY DEPARTMENT HAS INSTALLED CABINET. PROTECTIVE POSTS SHALL BE 3'-8" ABOVE AND 3 FEET BELOW FINISHED GRADE. POSTS ARE TO PROTECT ELECTRICAL INFRASTRUCTURE FROM TRAFFIC AND SHALL NOT INTERFERE WITH DOOR OPENINGS.

2. HIGH VOLTAGE CONDUITS SHALL BE CENTERED AND IN A STRAIGHT LINE, WITH 2" CLEARANCE BETWEEN CONDUITS.

REV: 12/9/2011

| | | | |
|---|---|---|---|
| CITY OF GRAND ISLAND UTILITIES DEPARTMENT | DATE: 4/12/1996<br>DRAWN BY: P.S.L.<br>CHECKED BY: T.W.B. | SECTIONALIZER CABINET CONDUIT INSTALLATION | PLAN EU - 10 |

# SPECIFICATIONS FOR SECTIONALIZING CABINET

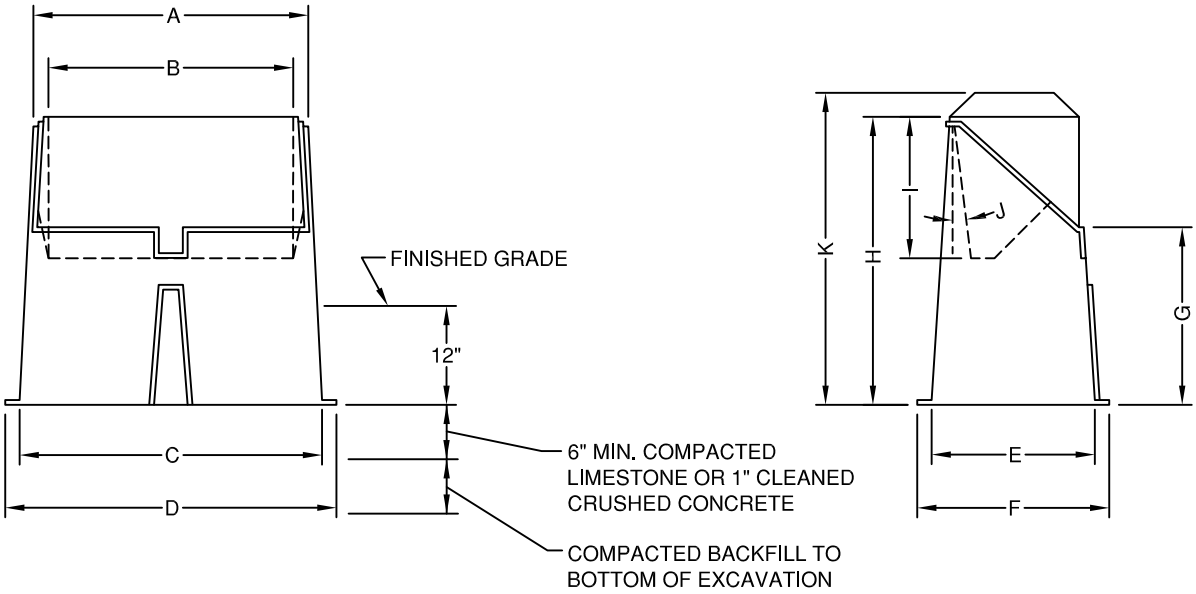


| DIEMENSIONS: | | A | B | C | D | E | F | G | H | I | J | K |
|---|---|---|---|---|---|---|---|---|---|---|---|---|
| NORDIC ND-450 | 3 PHASE: | 74.5" | 66" | 82" | 89.5" | 43.5" | 50.5" | 35" | 61" | 15" | 5° | 64" |
| NORDIC ND-350 | 3 PHASE: | 57" | 51" | 63" | 74.5" | 34" | 45" | 37" | 48" | 15" | 5° | 53" |
| NORDIC ND-150 | 1 PHASE: | 26" | 21" | 32" | 39" | 36" | 43" | 28" | 48" | 15" | 5° | 52" |

CABINETS SHALL BE FIBERGLASS - SUNLIGHT RESISTEANT.

CABINETS SHALL INCORPORATE GROUND SLEEVE PRINCIPAL INTO MOUNTING BASE WITH MINIMUM 3-1/2" LIP AROUND BASE FOR STABILITY.

3Ø MOUNTING BOARD SHALL BE A MINIMUM OF 51" WIDE BY 15" HIGH TO ALLOW SPACE FOR THREE 4 POINT 15KV LOAD BREAK JUNCTIONS WITH 2 STAINLESS STEEL PARKING STANDS.

1Ø MOUNTING BOARD SHALL BE A MINIMUM OF 21" WIDE BY 15" HIGH TO ALLOW SPACE FOR ONE 4 POINT 15KV LOAD BREAK JUNCTIONS WITH 2 STAINLESS STEEL PARKING STANDS.

MOUNTING BOARD SHALL BE AT 5 DEGREES FROM VERTICAL FOR COMFORTABLE OPERATION OF LOAD BREAK ELBOWS.

STAINLESS STEEL DOOR PROPS SHALL BE PROVIDED.

ALL MATERIALS SHALL BE AS LISTED, OR AN APPROVED EQUAL. THE USE OF A BRAND NAME IS FOR THE PURPOSE OF DESCRIBING A STANDARD QUALITY, PERFORMANCE, AND CHARACTERISTIC DESIRED, AND IS NOT INTENDED TO LIMIT OR RESTRICT COMPETITION.

REV: 12/9/2011

| | | | |
|---|---|---|---|
| CITY OF GRAND ISLAND UTILITIES DEPARTMENT | DATE: 4/4/1996<br>DRAWN BY: K.W.S.<br>CHECKED BY: T.W.B. | SECTIONALIZING CABINET DIMENSIONS | PLAN EU - 11 |

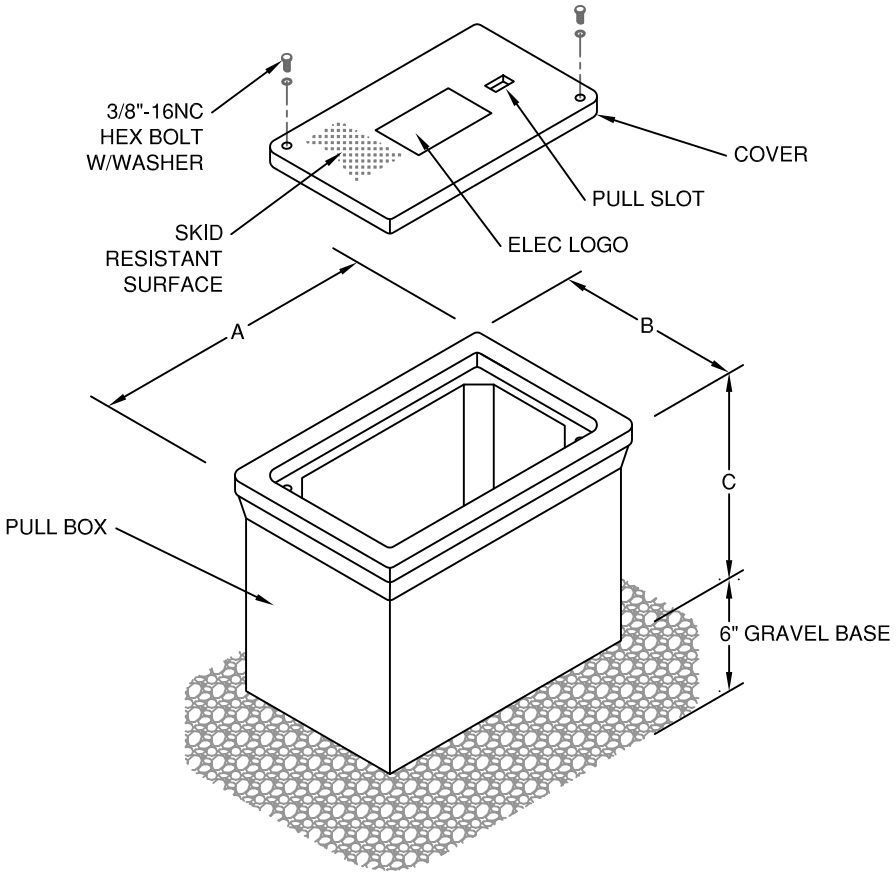


| DESCRIPTION | PART NO. | A | B | C | WT. LBS |
|---|---|---|---|---|---|
| TYPE 1 PULL BOX WITH LOCKING COVER | PG1324BA18 PG1324CA00 | 25" | 15.5" | 18" | 74 |
| TYPE 2 PULL BOX WITH LOCKING COVER | A6001868TX18 A6001868TC | 24" | 13" | 18" | 90 |
| TYPE 3 PULL BOX WITH LOCKING COVER | A6001974TX18 A6001974TC | 36" | 24" | 18" | 161 |
| TYPE 4 PULL BOX WITH LOCKING COVER | PC1212BA12 PC1212CA00 | 14.75" | 14.75" | 12.75" | 31 |

TYPE 1 ENCLOSURES SHALL BE COMPOSOLITE AS MANUFACTURED BY QUAZITE CORPORATION OR APPROVED EGUAL. ENCLOSURES AND COVERS SHALL BE CONCRETE GRAY COLOR AND RATED FOR NO LESS THAN 5,000 LBS. OVER A 10" X 10" AREA AND BE DESIGNED AND TESTED TO TEMPERATURES OF -50° F. MATERIAL COMPOSITION STRENGTH SHALL BE NO LESS THAN 11,000 PSI.

TYPE 2 AND TYPE 3 ENCLOSURES SHALL BE MANUFACTURED BY ARMORCAST PRODUCTS CO. OR APPROVED EGUAL. ENCLOSURES AND COVERS SHALL BE CONCRETE GRAY COLOR AND RATED FOR NOT LESS THAN 20,000 LBS. OVER A 10" X 10" AREA AND MEET ALL REQUIREMENTS OF W.U.C.3.6, 20K "TRAFFIC" LOAD RATED BOXES AND COVERS.

TYPE 4 ENCLOSURES SHALL BE MANUFACTURED BY QUAZITE CORPORATION OR APPROVED EGUAL. ENCLOSURES AND COVERS SHALL BE CONCRETE GRAY COLOR AND RATED FOR NO LESS THAN 15,000 LBS. OVER A 10" X 10" AREA AND MEET ALL REQUIREMENTS OF W.U.C.3.6, 20K "TRAFFIC" LOAD RATED BOXES AND COVERS.

ALL MATERIALS SHALL BE AS LISTED, OR AN APPROVED EQUAL. THE USE OF A BRAND NAME IS FOR THE PURPOSE OF DESCRIBING A STANDARD QUALITY, PERFORMANCE, AND CHARACTERISTIC DESIRED, AND IS NOT INTENDED TO LIMIT OR RESTRICT COMPETITION.

REV: 1/13/2002
REV: 6/5/2003

| | | | |
|---|---|---|---|
| CITY OF GRAND ISLAND UTILITIES DEPARTMENT | DATE: 4/4/1996<br>DRAWN BY: K.W.S<br>CHECKED BY: T.W.B. | PULL BOX<br>TYPE 1, 2, 3, 4 | PLAN<br>EU - 12 |

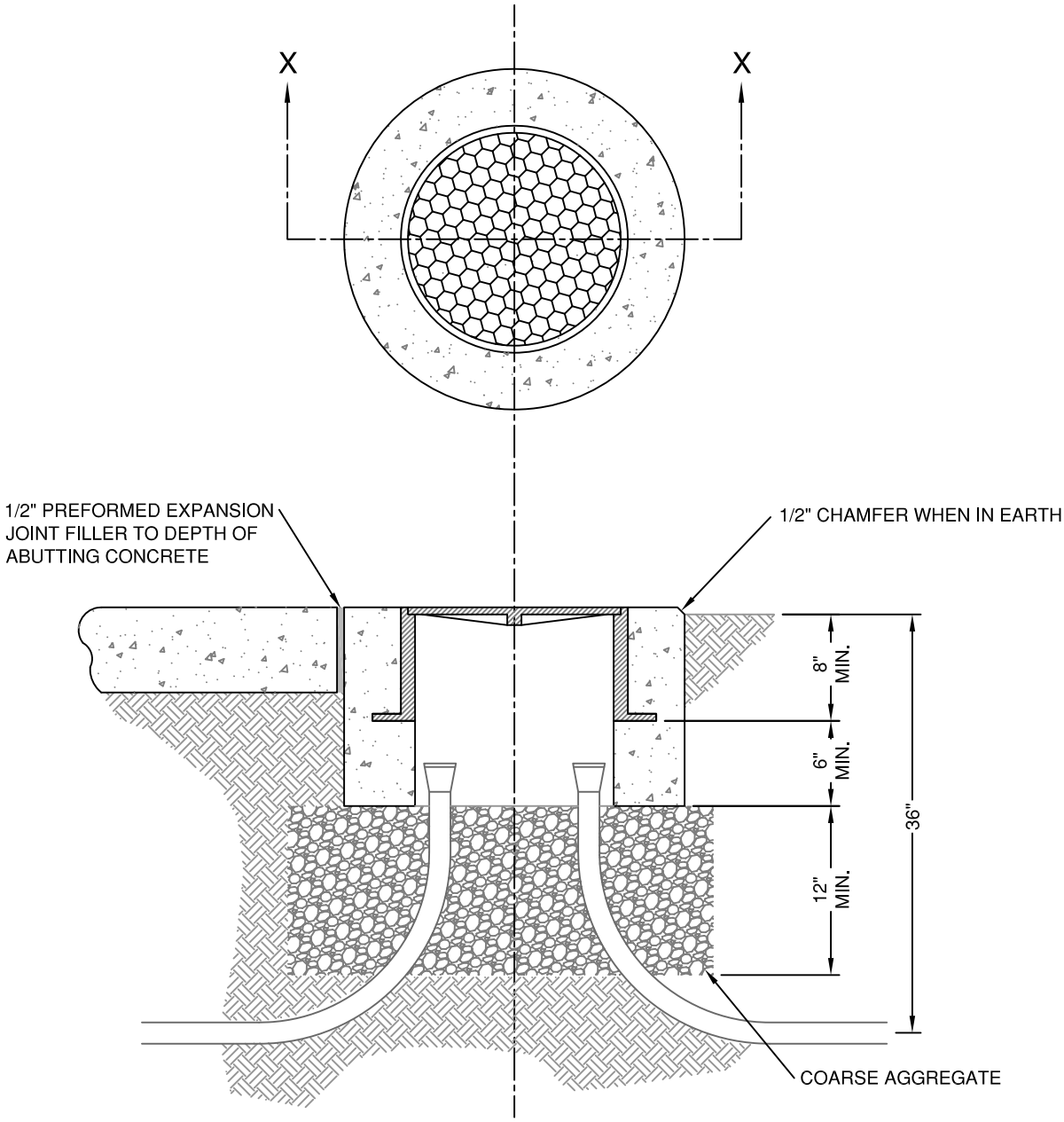


SECTION X-X

NOTES:

CONCRETE SHALL BE CLASS 47-B MODIFIED, AS PER CITY SPECIFICATIONS SECTION 2, DIVISION 2.

PULL BOXES SHALL HAVE A LIP OR FLANGED EDGE FRAMING THE COVER OPENING TO PROVIDE A FLUSH, FRAMED SEPARATION BETWEEN THE SURFACING MATERIAL AND THE EDGES OF THE COVER.

PULL BOX COVERS SHALL BE EMBOSSED WITH AN ANTI-SLIP SURFACE PATTERN, AND SHALL FIT SUFFICIENTLY TIGHT TO PREVENT ENTRANCE OF RUN-OFF WATER.

SEATING SURFACES OF FRAME AND COVER SHALL BE MACHINED TO FIT. FRAME AND COVER TO BE CAST IRON. TYPE 5 PULL BOX SHALL BE CAPABLE OF SUPPORTING VEHICULAR TRAFFIC IN ACCORDANCE WITH AASHTO SPECIFICATIONS H-20 LOADING.

REVISED: 6/5/2003

| | | | |
|---|---|---|---|
| CITY OF GRAND ISLAND UTILITIES DEPARTMENT | DATE: 10/1/1998<br>DRAWN BY: T.D.Z.<br>CHECKED BY: T.W.B. | PULL BOX TYPE 5 | PLAN EU - 13 |

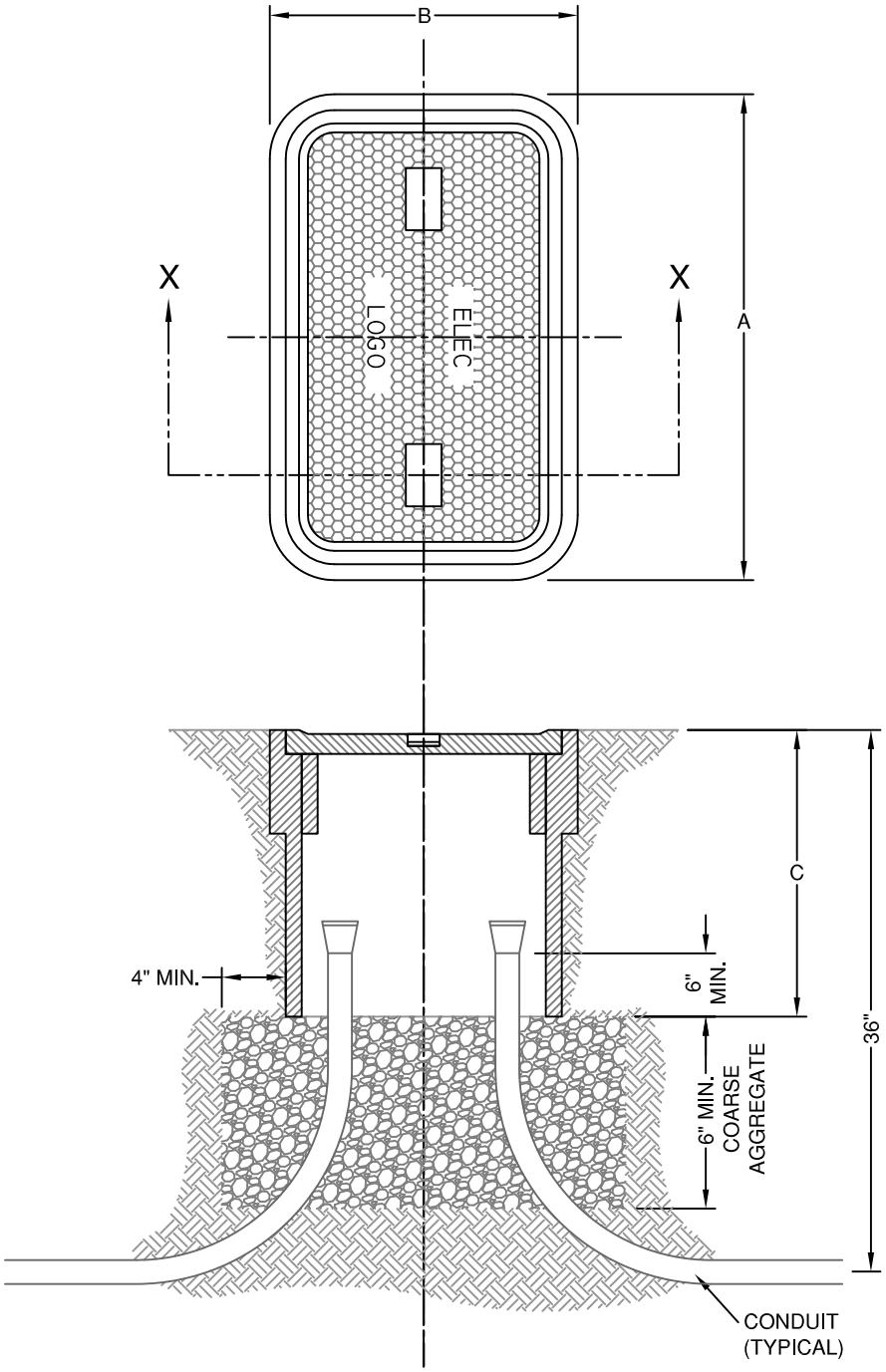


SECTION X-X

SEE TABLE ON STANDARD PLAN EU-12 FOR PULL BOX DIEMENSIONS.

REVISED: 6/5/2003

| | | | |
|---|---|---|---|
| CITY OF GRAND ISLAND UTILITIES DEPARTMENT | DATE: 10/1/1998<br>DRAWN BY: T.D.Z.<br>CHECKED BY: T.W.B. | PULL BOX CONDUIT INSTALLATION | PLAN EU - 14 |

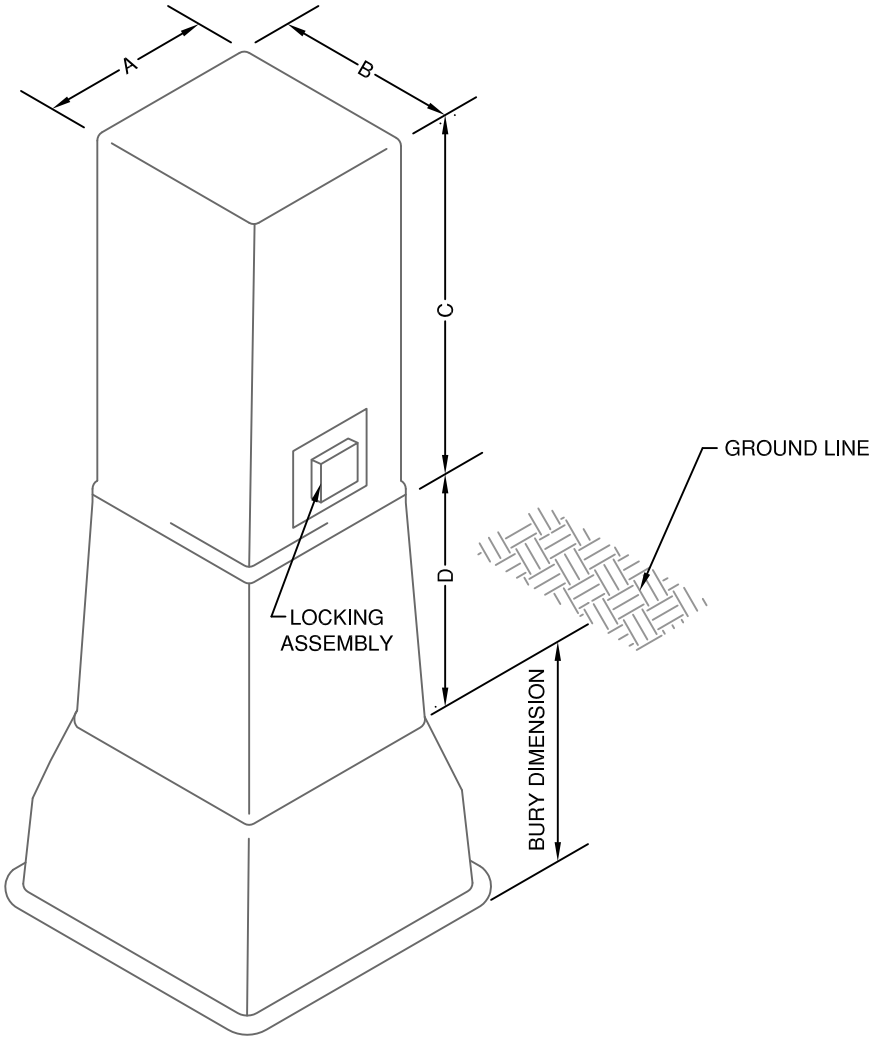


| DESCRIPTION | PART NO. | A | B | C | D | LOCKABLE | BURY DIMENSION |
|---|---|---|---|---|---|---|---|
| TYPE 1 SECONDARY PEDESTAL | PEN-CELL AG-15HD | 14" | 11" | 18" | 18" | X | 12" |
| TYPE 2 SECONDARY PEDESTAL | PEN-CELL AG-14HP | 11" | 14" | 18" | 12" | X | 6" |
| TYPE 3 SECONDARY PEDESTAL | WESTERN POWER SPM-190 | 12" | 18.5" | 24" | 30" | X | 12" |

NOTE:
ALL MATERIALS SHALL BE AS LISTED, OR AN APPROVED EQUAL. THE USE OF A BRAND NAME IS FOR THE PURPOSE OF DESCRIBING A STANDARD QUALITY, PERFORMANCE, AND CHARACTERISTIC DESIRED, AND IS NOT INTENDED TO LIMIT OR RESTRICT COMPETITION.

REV: 3/6/2012

| | | | |
|---|---|---|---|
| CITY OF GRAND ISLAND UTILITIES DEPARTMENT | DATE: 4/12/1996<br>DRAWN BY: K.W.S.<br>CHECKED BY: T.W.B. | SECONDARY PEDESTAL | PLAN EU - 15 |

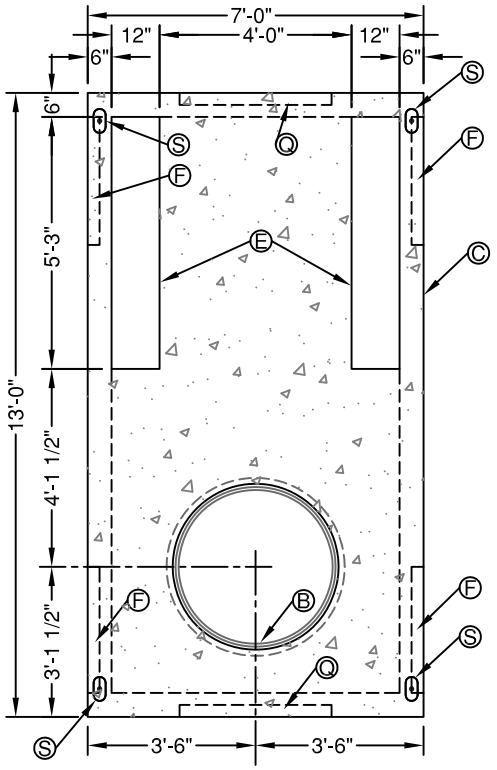


NOTE:
REINFORCING FOR THE LID SECTION IS TO BE DETERMINED BY THE PRECAST CONCRETE CONTRACTOR.

VAULT PLAN

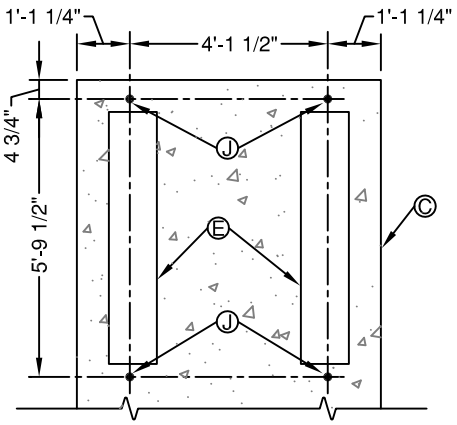


ANCHOR BOLT PLAN

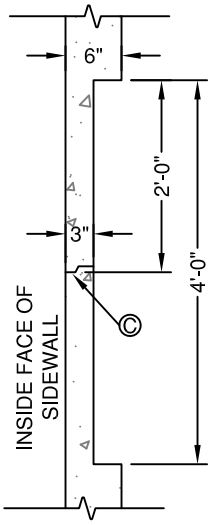


KNOCK-OUT

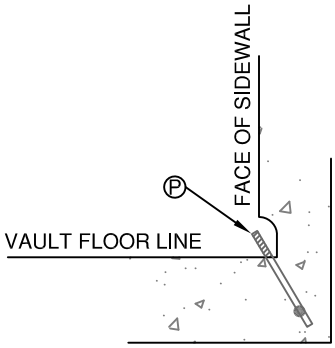


LIFTING POINT DETAIL

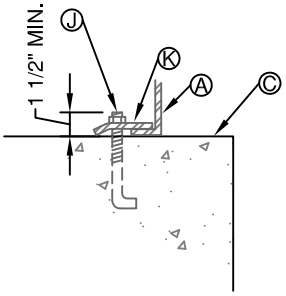


ANCHOR BOLT DETAIL

## ITEM INDEX

A. - S & C MODEL PME-9 PAD-MOUNTED GEAR (BY UTILITY)
B. - NEENAH MODEL R-1792-JL HEAVY DUTY SOLID GRATE MANHOLE
C. - PRECAST CONCRETE VAULT TOP SECTION
D. - PRECAST CONCRETE VAULT BOTTOM SECTION
E. - 12" x 63" PRECAST CONCRETE KNOCK-OUTS
F. - 32" x 48" PRECAST CONCRETE KNOCK-OUTS
G. - TYPICAL PRECAST CONCRETE TONGUE AND GROOVE JOINT
H. - TYPICAL BOX SECTION CORNER CHAMFER
J. - 5/8" x 6" ANCHOR BOLT
K. - ANCHOR BRACKET (BY UTILITY)
L. - MODEL #SU-125 12.5" PLASTIC SUMP W/LID
M. - 1-1/2" x 1-1/2" x 12 GAUGE STEEL UNI-STRUT (BY UTILITY)
N. - 3/8" DIA. STAR INSERTS
P. - 1/2" CARBON STEEL PRESTRESS CABLE, TYPE PI-1 (HYTRELL ®) PULLING EYE W/ POCKET AND LID BY PA INSERT CORP. OR APPROVED EQUAL.
Q. - 38" x 48" PRECAST CONCRETE KNOCK-OUTS
R. - 6" Ø TERMINATORS
S. - BERK LIFTING INSERT

REV: 6/5/2003
REV: 8/2/2001
REV: 4/25/2001

## GENERAL NOTES

1. - ALL CONCRETE TO BE USED IN CONSTRUCTION OF VAULT IS TO BE TYPE 47-B, AS PER CITY OF GRAND ISLAND SPECIFICATIONS DIVISION 2 "CONCRETE PAVING SPECIFICATIONS".
2. - ALL CONCRETE JOINTS ARE TO BE SEALED AND SET IN MASTIC.
3. - LIFTING HOOKS SHALL BE CAST IN EACH VAULT SECTION, AND POSITIONED SO THAT FUTURE USE IS POSSIBLE.
4. - VAULTS SHALL BE CONSTRUCTED TO HAVE A LOAD RATING OF H-20 OR HIGHER.
5. - ALL SECTIONS OF UNI-STRUT SHALL BE MOUNTED BY THE UTILITY DEPARTMENT. THE ANCHORS FOR THE MOUNTING UNI-STRUT SHALL BE CAST INTO THE VAULT SECTIONS, AS SPECIFIED, BY THE PRECAST CONCRETE CONTRACTOR.
6. - ALL ANCHOR POINTS ARE TO BE CONSTRUCTED TO WITHSTAND A PULLING FORCE OF 30,000 LBS.
7. - ALL MATERIALS SHALL BE AS LISTED, OR AN APPROVED EQUAL. THE USE OF A BRAND NAME IS FOR THE PURPOSE OF DESCRIBING A STANDARD QUALITY, PERFORMANCE, AND CHARACTERISTIC DESIRED, AND IS NOT INTENDED TO LIMIT OR RESTRICT COMPETITION.

| | | | |
|---|---|---|---|
| CITY OF GRAND ISLAND UTILITIES DEPARTMENT | DATE: 4/12/2001<br>DRAWN BY: ZEC<br>CHECKED BY: T.W.B. | ELECTRICAL VAULT<br>12'-0"x6'-0"x8'-4" | PLAN<br>EU - 16<br>1 OF 2 |

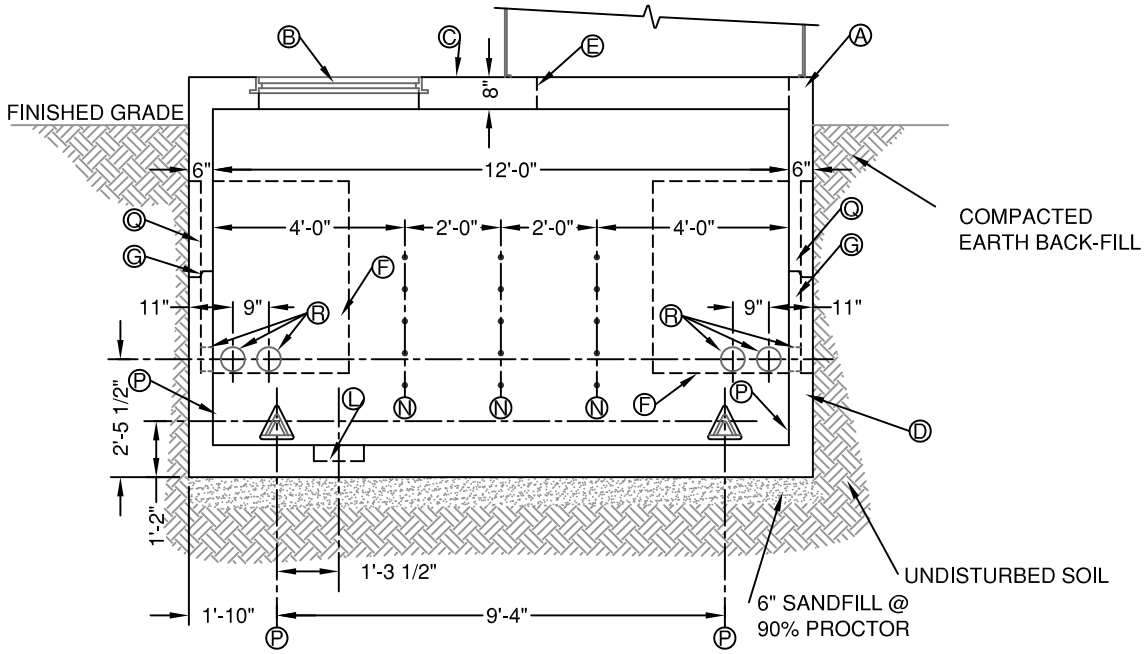


LONGITUDINAL SECTION

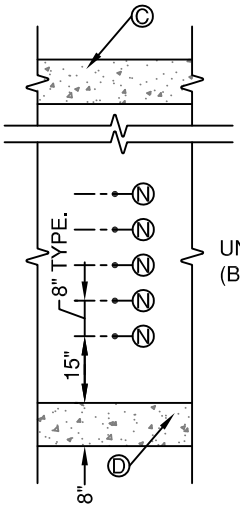


SIDEWALL

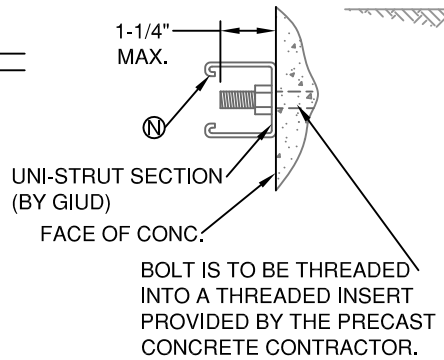


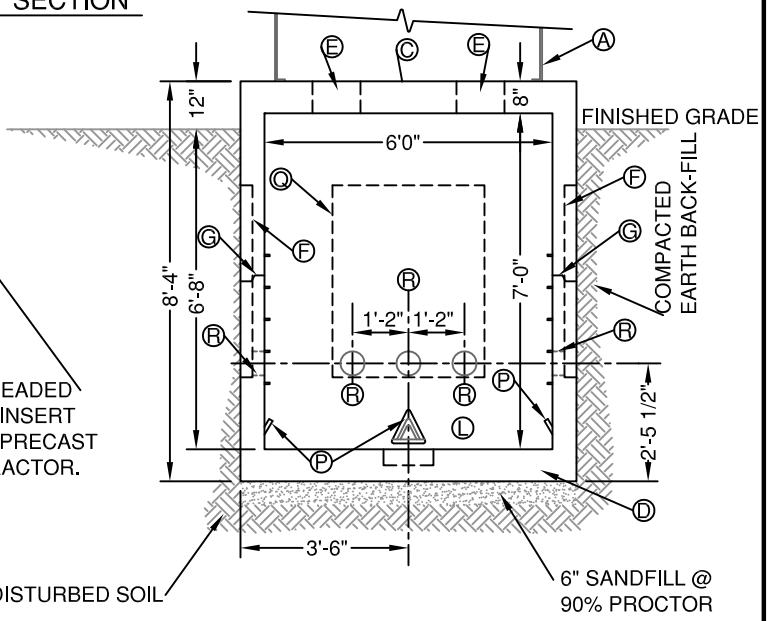


TRANSVERSE SECTION

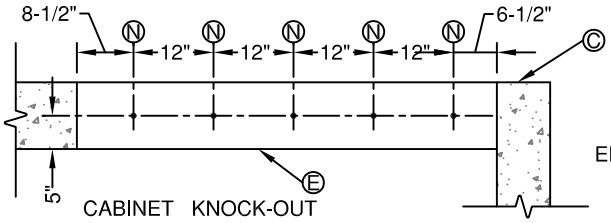


UNI-STRUT ANCHORING DETAILS

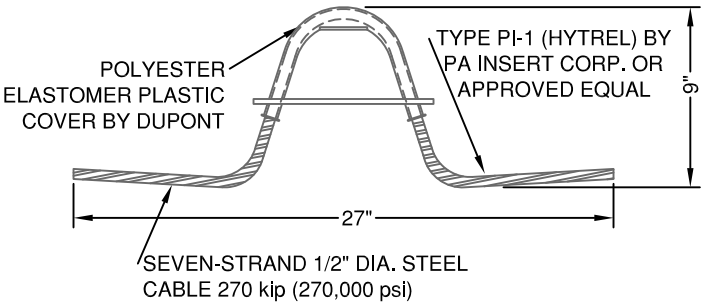


PULLING EYE DETAIL

REV: 8/2/2001
REV: 4/25/2001
REV: 6/5/2003

| | | | |
|---|---|---|---|
| CITY OF GRAND ISLAND UTILITIES DEPARTMENT | DATE: 4/12/2001<br>DRAWN BY: ZEC<br>CHECKED BY: T.W.B. | ELECTRICAL VAULT<br>12'-0"x6'-0"x8'-4" | PLAN<br>EU - 16<br>2 OF 2 |

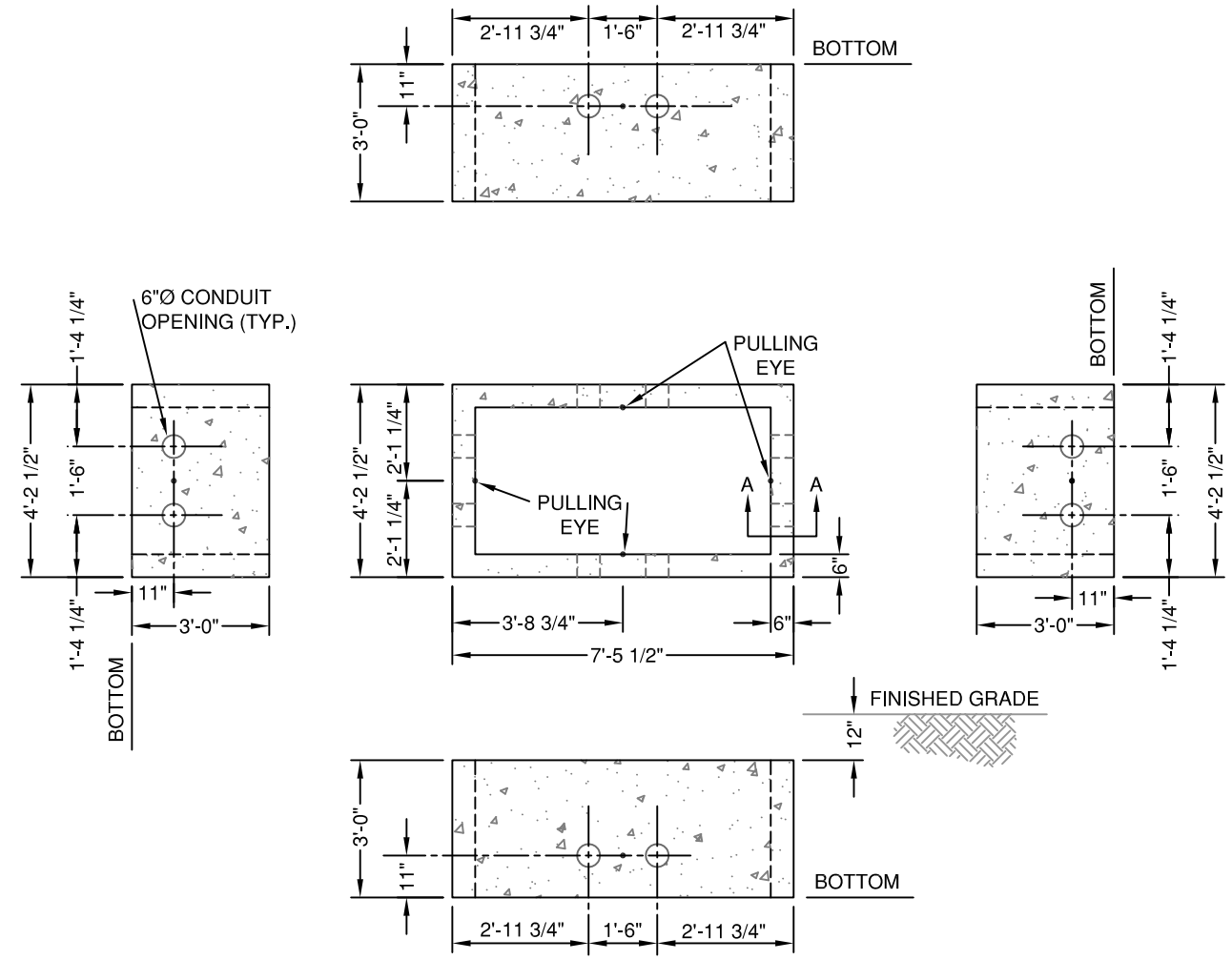


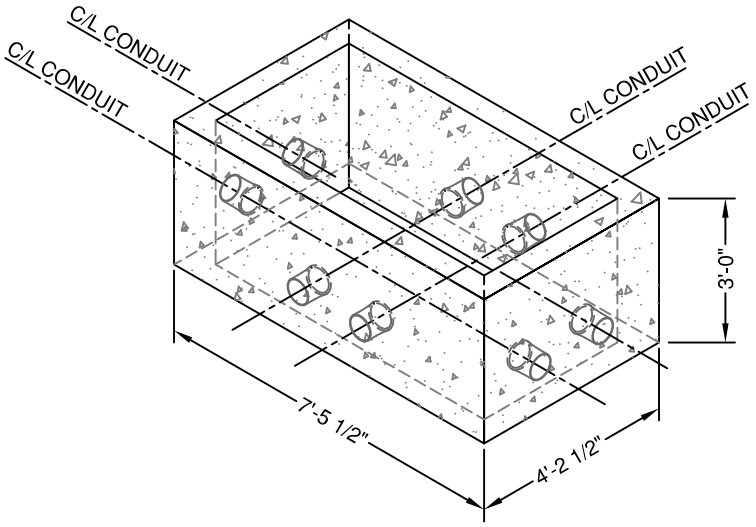


ISOMETRIC VIEW

| BILL OF MAT'L. | | |
|---|---|---|
| ITEM DESCRIPTION | | No. |
| R 402 | #4x2'-9" | 20 |
| R 401 | #4x3'-9 $\frac{1}{2}$" 1'-6" 1'-6" | 8 |
| R 400 | #4x12'-6" | 8 |

WEIGHT = 5,075 lbs.

REV.: 6/6/2003
REV.: 8/2/2001

| | | | |
|---|---|---|---|
| CITY OF GRAND ISLAND UTILITIES DEPARTMENT | DATE: 4/12/1996<br>DRAWN BY: ZEC<br>CHECKED BY: T.W.B. | UTILITY ENCLOSURE<br>7'x4'x3' PRECAST<br>CONCRETE | PLAN<br>EU-17<br>1 OF 2 |

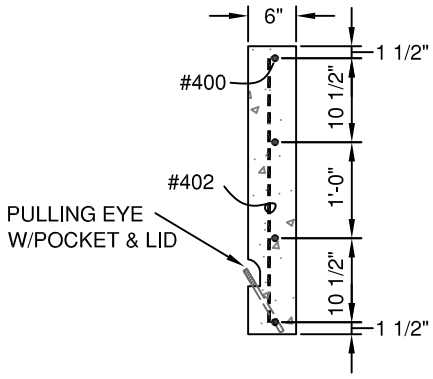


SECTION A - A

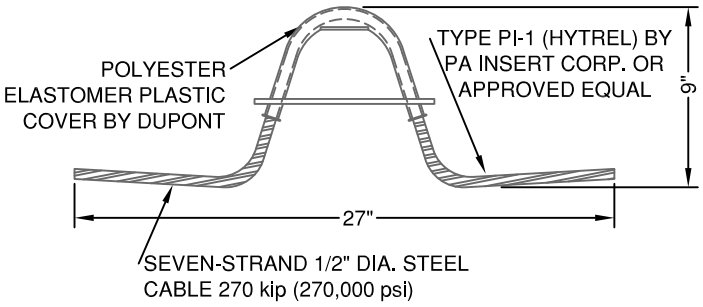


PULLING EYE DETAIL

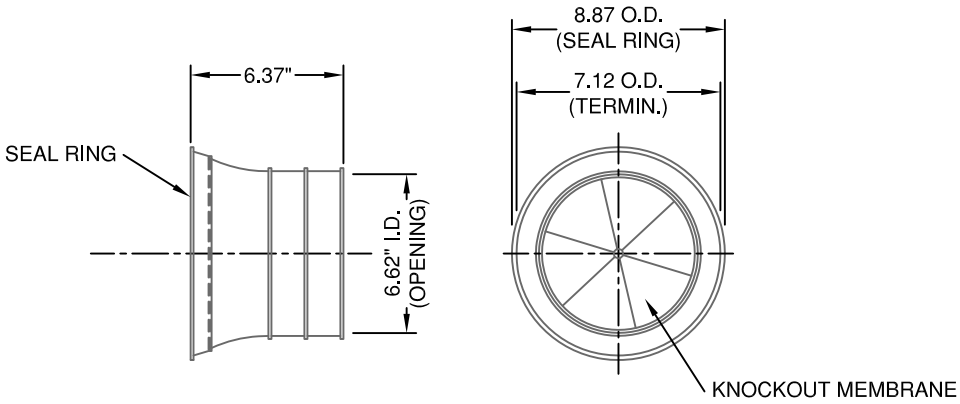


6" TERMINATOR DETAIL

## GENERAL NOTES

1. DESIGN OF PRECAST UTILITY ENCLOSURE SHALL BE UNDER DIRECT SUPERVISION OF A PROFESSIONAL CIVIL OR STRUCTURAL ENGINEER LICENSED IN THE STATE OF NEBRASKA. IF REQUESTED BY THE G.I.U.D., SUBMIT SEALED SHOP DRAWINGS AND CALCULATIONS. NOTE: FIBERMESH IS NOT A REPLACEMENT OF FLEXERAL REINFORCEMENT.

2. CONCRETE MIX DESIGN PER ACI 301-95. DESIGN OF REINFORCEMENT PER ACI 318-95. ALL CONCRETE TO BE 4000 PSI MIN. AT 28 DAYS WITH FIBERMESH (MIN. 1.5#/CY OF CONCRETE).

3. ALL REINFORCEMENT TO BE GRADE 60, ASTM A615/A615M-96A. WIRE FABRIC TO BE GRADE 75, ASTM A185/A185M-96. PRECASTER TO COORDINATE LOCATION OF CONCRETE WALL JOINT WITH OWNER.

4. LOADING CRITERIA: LOADING: PER ASTM C857 (STANDARD PRACTICE FOR MINIMUM STRUCTURAL LOADING FOR UNDERGROUND PRECAST CONCRETE STRUCTURES). USE 35 PCF (EQUIVALENT FLUID PRESSURE ABOVE WATER TABLE). USE 80 PCF (EQUIVALENT FLUID PRESSURE BELOW WATER TABLE). ASSUME SATURATED SOIL OR WATER TABLE AT 3'-0" BELOW FINISHED GRADE. MAXIMUM 4'-0" OVERBURDEN.

5. ALL CONDUIT OPENINGS SHALL HAVE AN ELECTRICAL/TELEPHONE TERMINATOR FOR 6" SCH 40 PVC MANUFACTURED BY PA INSERT CORP. OR APPROVED EQUAL, INSTALLED WITH FLARED SEAL RING TO INSIDE.

REV.: 6/6/2003
REV.: 8/2/2001

| | | | |
|---|---|---|---|
| CITY OF GRAND ISLAND UTILITIES DEPARTMENT | DATE: 4/12/1996<br>DRAWN BY: ZEC<br>CHECKED BY: T.W.B. | UTILITY ENCLOSURE<br>7'x4'x3' PRECAST<br>CONCRETE | PLAN<br>EU-17<br>2 OF 2 |

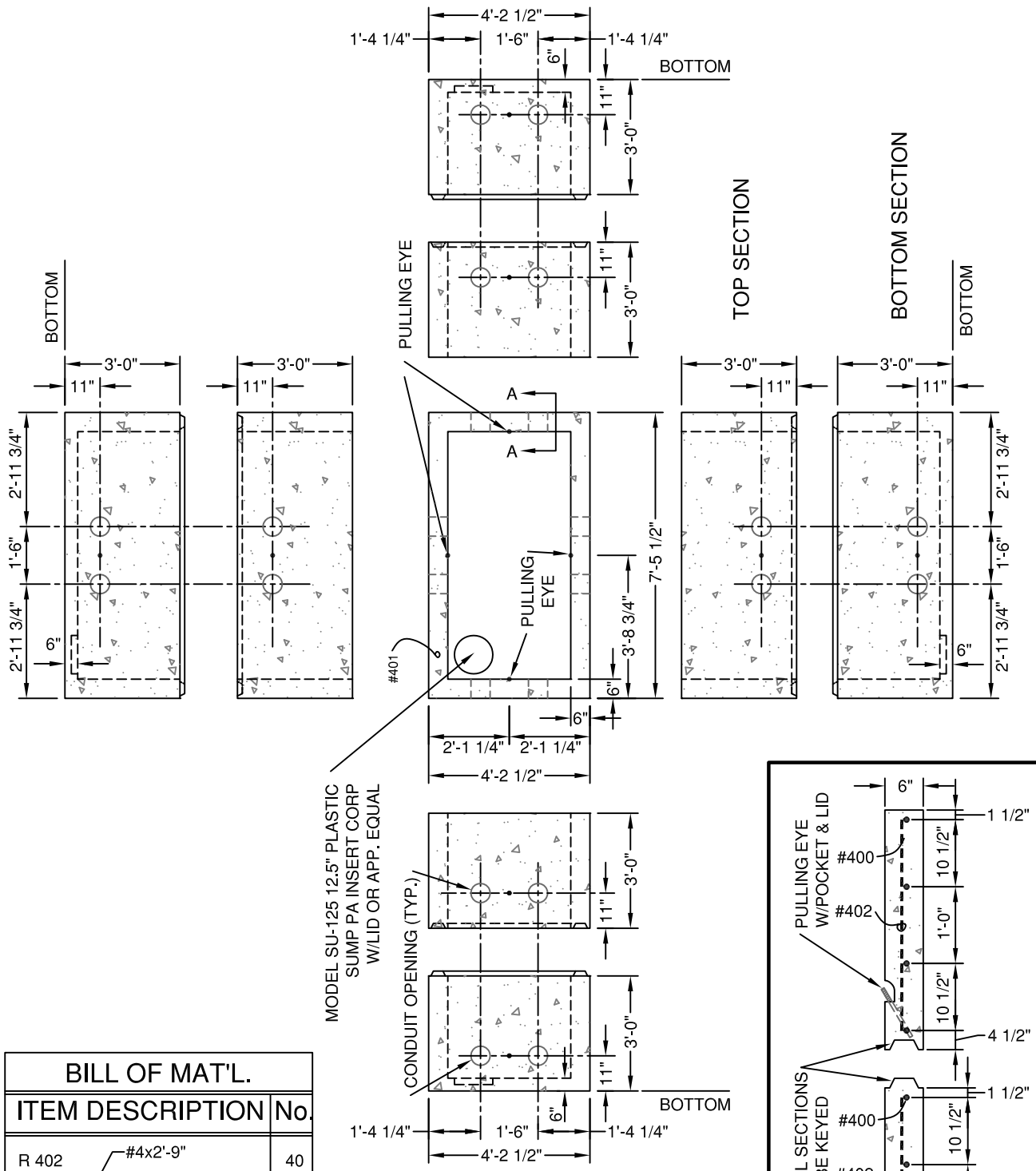


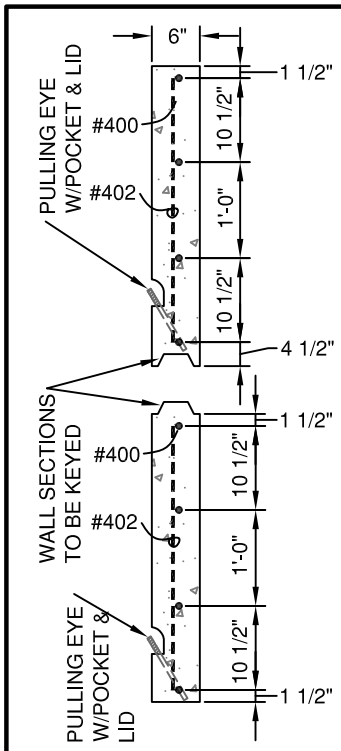


SECTION A - A

| BILL OF MAT'L. | | |
|---|---|---|
| ITEM DESCRIPTION | | No. |
| R 402 | #4x2'-9" | 40 |
| R 401 | #4x3'-9 $\frac{1}{2}$" 1'-6" 1'-6" | 16 |
| R 400 | #4x12'-6" | 16 |

REV.: 8/3/01 by ZEX

CITY OF GRAND ISLAND
UTILITIES DEPARTMENT

| | | | |
|---|---|---|---|
| DATE: 4/12/2001 | UTILITY ENCLOSURE | PLAN |
| DRAWN BY: ZEC | 7'x4'x6' PRECAST | EU-18 |
| CHECKED BY: T.W.B. | CONCRETE | 1 OF 2 |

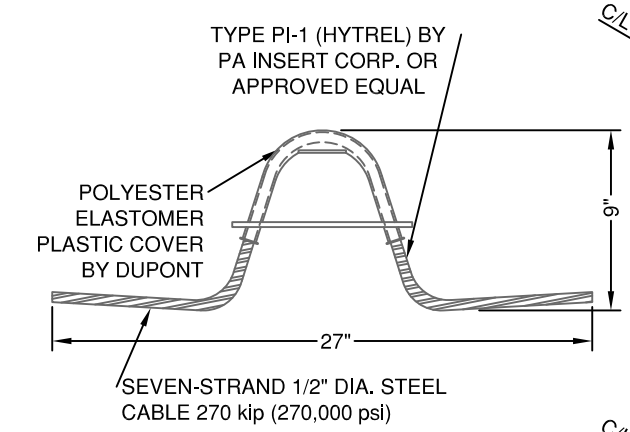


PULLING EYE DETAIL

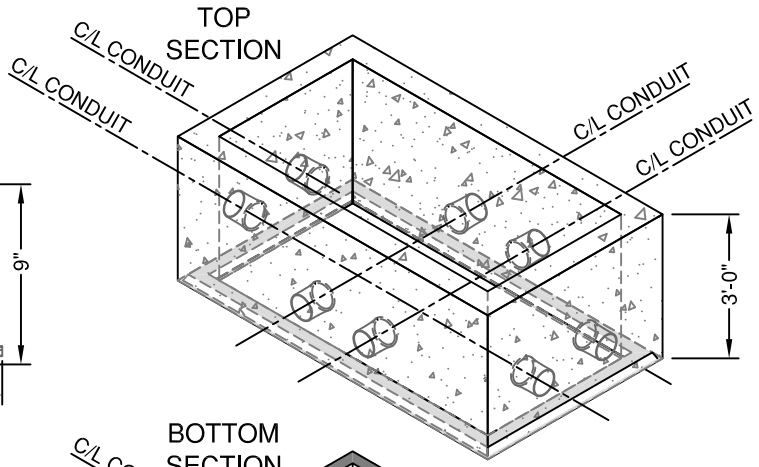


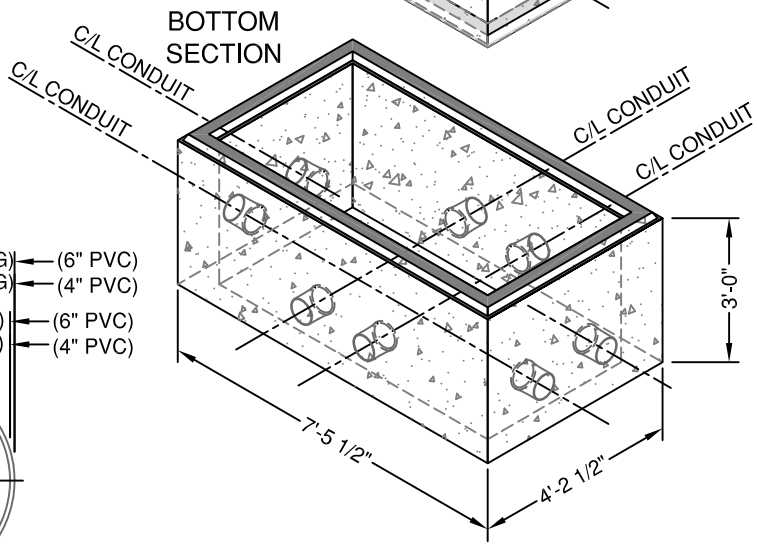


ISOMETRIC VIEW

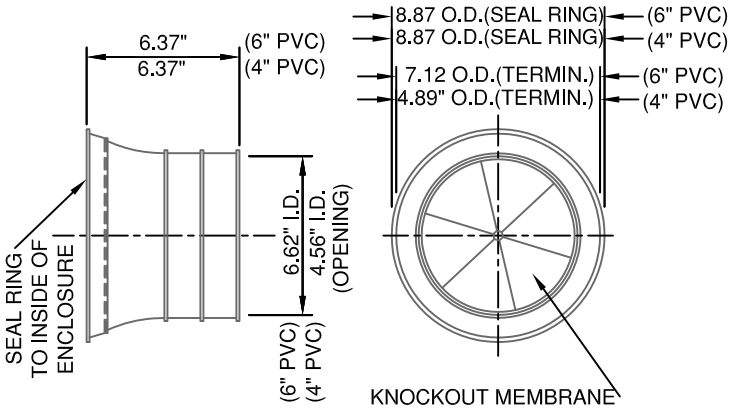


TERMINATOR DETAIL
(Sch 40 Only)

## GENERAL NOTES

1. DESIGN OF PRECAST UTILITY ENCLOSURE SHALL BE UNDER DIRECT SUPERVISION OF A PROFESSIONAL CIVIL OR STRUCTURAL ENGINEER LICENSED IN THE STATE OF NEBRASKA. IF REQUESTED BY THE G.I.U.D., SUBMIT SEALED SHOP DRAWINGS AND CALCULATIONS. NOTE: FIBERMESH IS NOT A REPLACEMENT OF FLEXERAL REINFORCEMENT.

2. CONCRETE MIX DESIGN PER ACI 301-95. DESIGN OF REINFORCEMENT PER ACI 318-95. ALL CONCRETE TO BE 4000 PSI MIN. AT 28 DAYS WITH FIBERMESH (MIN. 1.5#/C.Y. OF CONCRETE).

3. ALL REINFORCEMENT TO BE GRADE 60, ASTM A615/A615M-96A. WIRE FABRIC TO BE GRADE 75, ASTM A185/A185M-96. PRECASTER TO COORDINATE LOCATION OF CONCRETE WALL JOINT WITH OWNER.

4. LOADING CRITERIA: LOADING: PER ASTM C857 (STANDARD PRACTICE FOR MINIMUM STRUCTURAL LOADING FOR UNDERGROUND PRECAST CONCRETE STRUCTURES). USE 35 PCF (EQUIVALENT FLUID PRESSURE ABOVE WATER TABLE). USE 80 PCF (EQUIVALENT FLUID PRESSURE BELOW WATER TABLE). ASSUME SATURATED SOIL OR WATER TABLE AT 3'-0" BELOW FINISHED GRADE. MAXIMUM 4'-0" OVERBURDEN.

5. ALL CONDUIT OPENINGS SHALL HAVE AN ELECTRICAL/TELEPHONE TERMINATOR FOR SCH 40 MANUFACTURED BY PA INSERT CORP. OR APPROVED EQUAL, INSTALLED WITH FLARED SEAL RING TO INSIDE, SIZE SHALL BE FOR: _____ 4" OR _____ 6" PVC PIPE. (CHECK ONE)

| | | | |
|---|---|---|---|
| CITY OF GRAND ISLAND UTILITIES DEPARTMENT | DATE: 4/12/2001<br>DRAWN BY: ZEC<br>CHECKED BY: T.W.B. | UTILITY ENCLOSURE<br>7'x4'x6' PRECAST<br>CONCRETE | PLAN<br>EU-18<br>2 OF 2 |

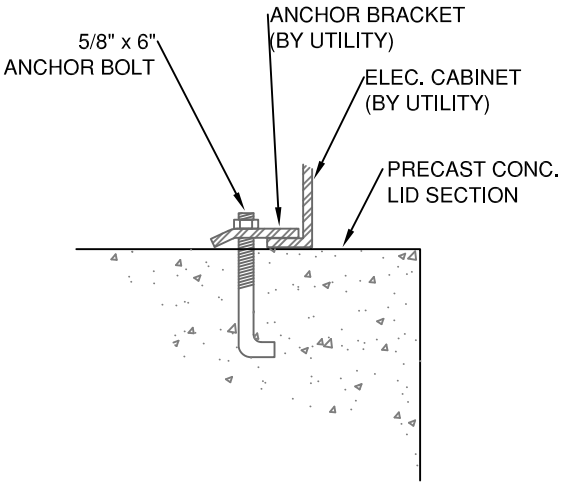


ANCHOR BOLT DETAIL

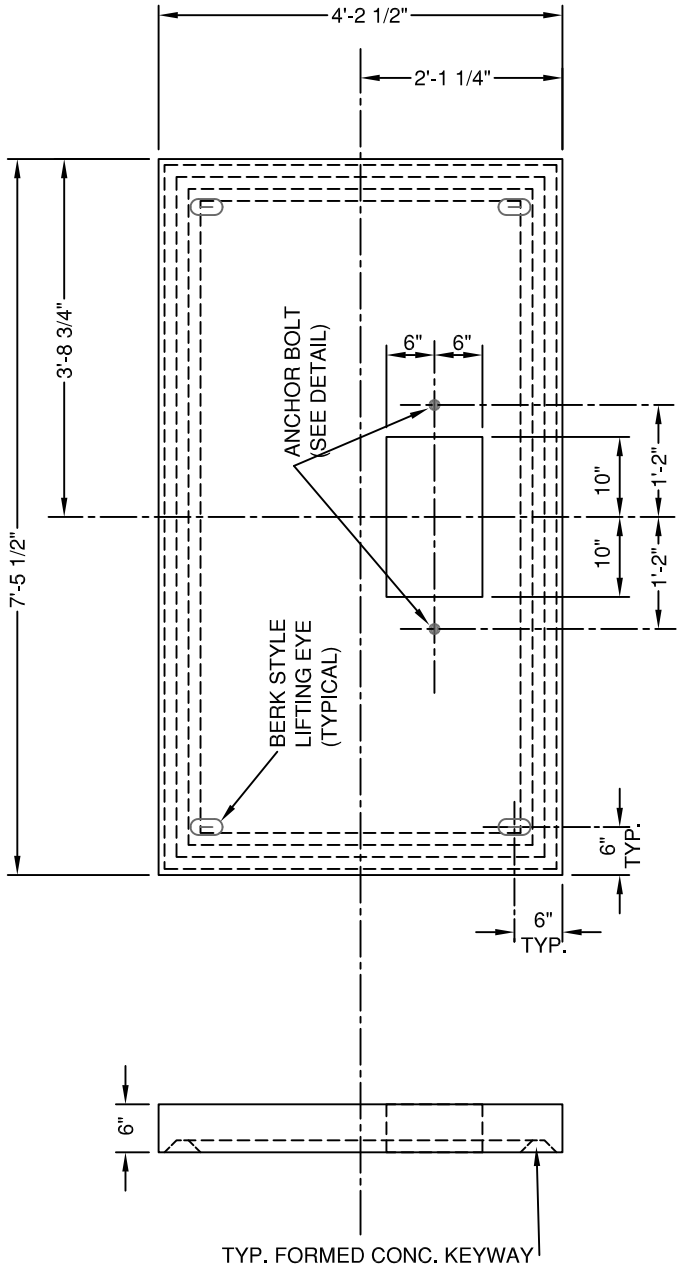


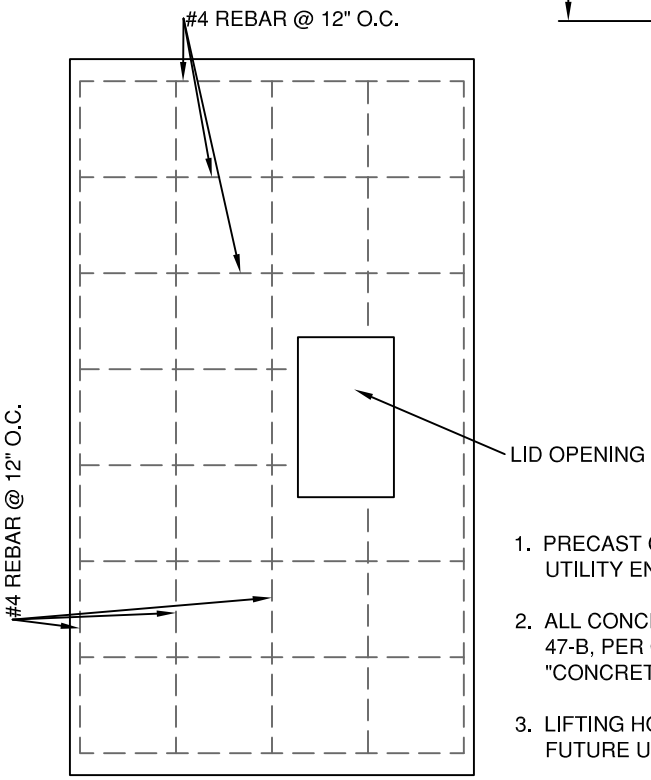


REBAR PLAN

## GENERAL NOTES

1. PRECAST CONCRETE LID IS TO BE CONSTRUCTED TO MATE WITH UTILITY ENCLOSURE TYPE EU-13 OR EU-14.
2. ALL CONCRETE TO BE USED IN CONSTRUCTION OF LID SHALL BE TYPE 47-B, PER CITY OF GRAND ISLAND SPECIFICATIONS DIVISION 2 "CONCRETE PAVING SPECIFICATIONS".
3. LIFTING HOOKS SHALL BE CAST AND POSITIONED IN THE LID SO THAT FUTURE USE IS POSSIBLE.
4. THE LID IS TO BE CONSTRUCTED TO HAVE A LOAD RATING OF H-20 OR HIGHER.

REV.: 6/6/2003
REV.: 1/3/2002

| | | | |
|---|---|---|---|
| CITY OF GRAND ISLAND UTILITIES DEPARTMENT | DATE: 5/17/2001<br>DRAWN BY: ZEC<br>CHECKED BY: T.W.B. | LID WITH OPENING FOR UTILITY ENCLOSURE (FOR 1Ø XFMR-TYPE 1) | PLAN EU-19 |

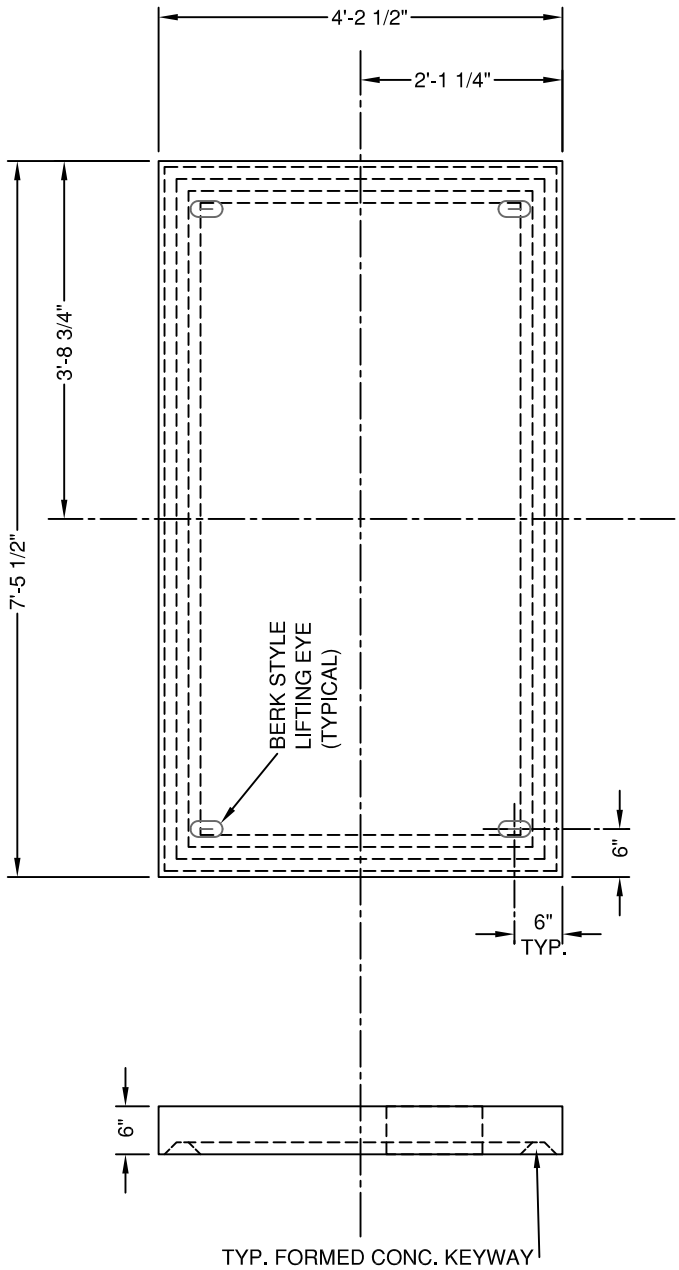


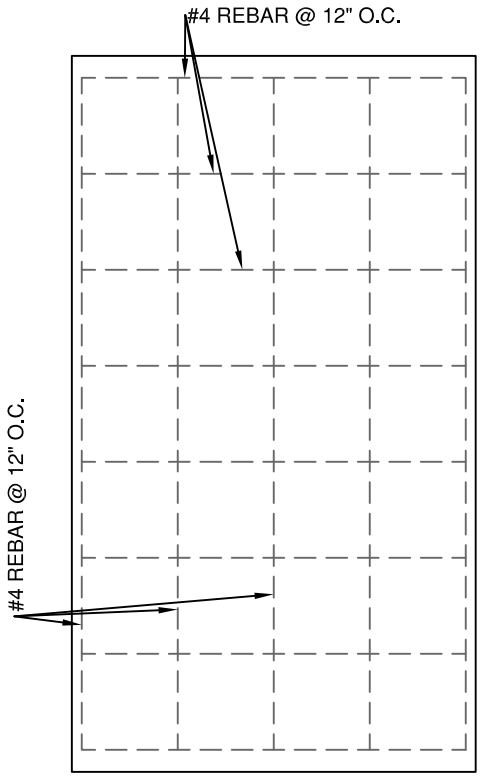


REBAR PLAN

## GENERAL NOTES

1. PRECAST CONCRETE LID IS TO BE CONSTRUCTED TO MATE WITH UTILITY ENCLOSURE TYPE EU-13 OR EU-14.
2. ALL CONCRETE TO BE USED IN CONSTRUCTION OF LID SHALL BE TYPE 47-B, PER CITY OF GRAND ISLAND SPECIFICATIONS DIVISION 2 "CONCRETE PAVING SPECIFICATIONS".
3. LIFTING HOOKS SHALL BE CAST AND POSITIONED IN THE LID SO THAT FUTURE USE IS POSSIBLE.
4. THE LID IS TO BE CONSTRUCTED TO HAVE A LOAD RATING OF H-20 OR HIGHER.

REV.: 6/6/2003

| | | | |
|---|---|---|---|
| CITY OF GRAND ISLAND UTILITIES DEPARTMENT | DATE: 5/17/2001<br>DRAWN BY: ZEC<br>CHECKED BY: T.W.B. | SOLID LID FOR UTILITY ENCLOSURE TYPE 2 | PLAN EU-20 |

# FIBERGLASS BOX PAD
# FOR PAD-MOUNTED SWITCHGEAR

## NORDIC ® TYPE GS-75-73-36BMG67X62

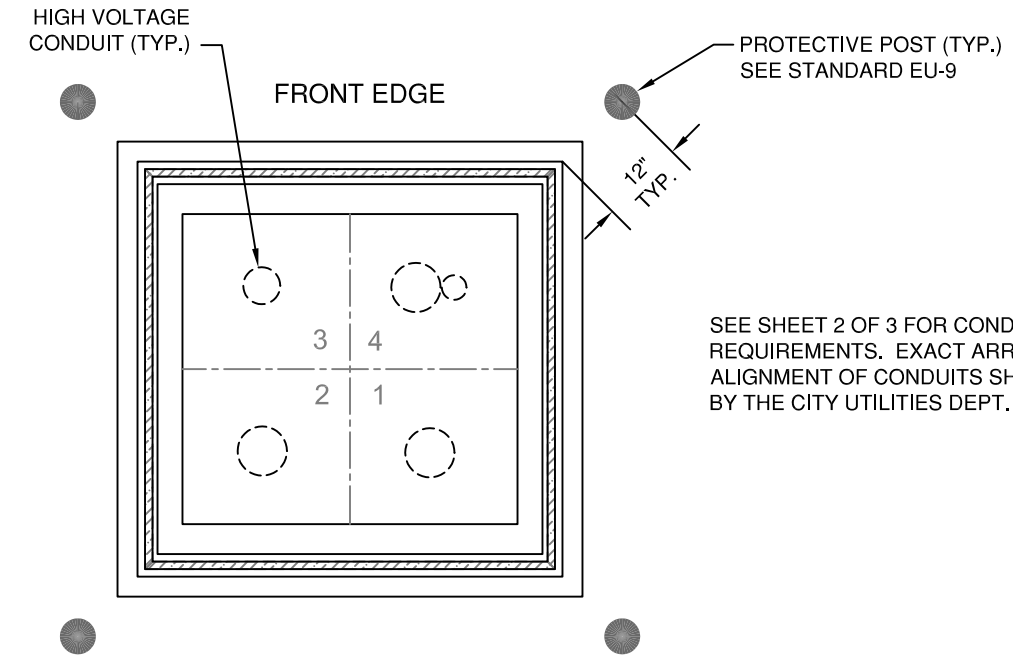


SEE SHEET 2 OF 3 FOR CONDUIT SPACING REQUIREMENTS. EXACT ARRANGEMENT AND ALIGNMENT OF CONDUITS SHALL BE SPECIFIED BY THE CITY UTILITIES DEPT. AT EACH LOCATION.

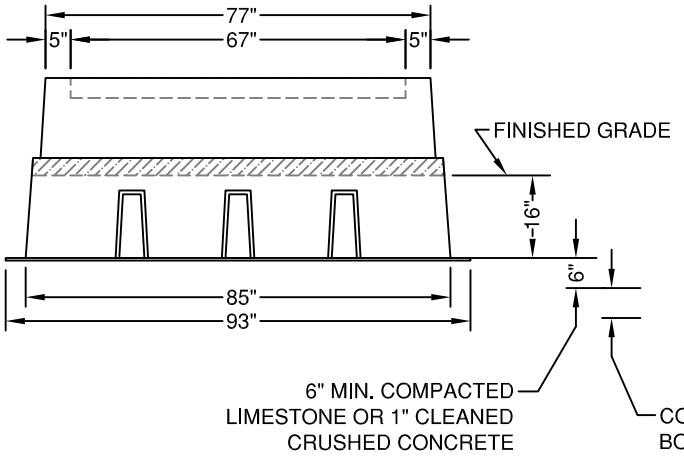


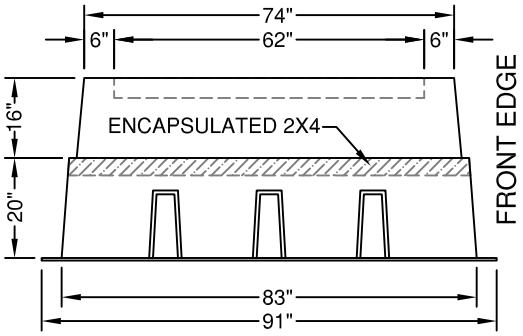


NOTE:
ALL MATERIALS SHALL BE AS LISTED, OR AN APPROVED EQUAL. THE USE OF A BRAND NAME IS FOR THE PURPOSE OF DESCRIBING A STANDARD QUALITY, PERFORMANCE, AND CHARACTERISTIC DESIRED, AND IS NOT INTENDED TO LIMIT OR RESTRICT COMPETITION.

REVISED
12/9/2011

| | | | |
|---|---|---|---|
| CITY OF GRAND ISLAND UTILITIES DEPARTMENT | DATE: 7/16/2003<br>DRAWN BY: K.J.M.<br>CHECKED BY: T.W.B. | FIBERGLASS BOX PAD FOR 3Ø SWITCHGEAR | PLAN EU-21 1 OF 3 |

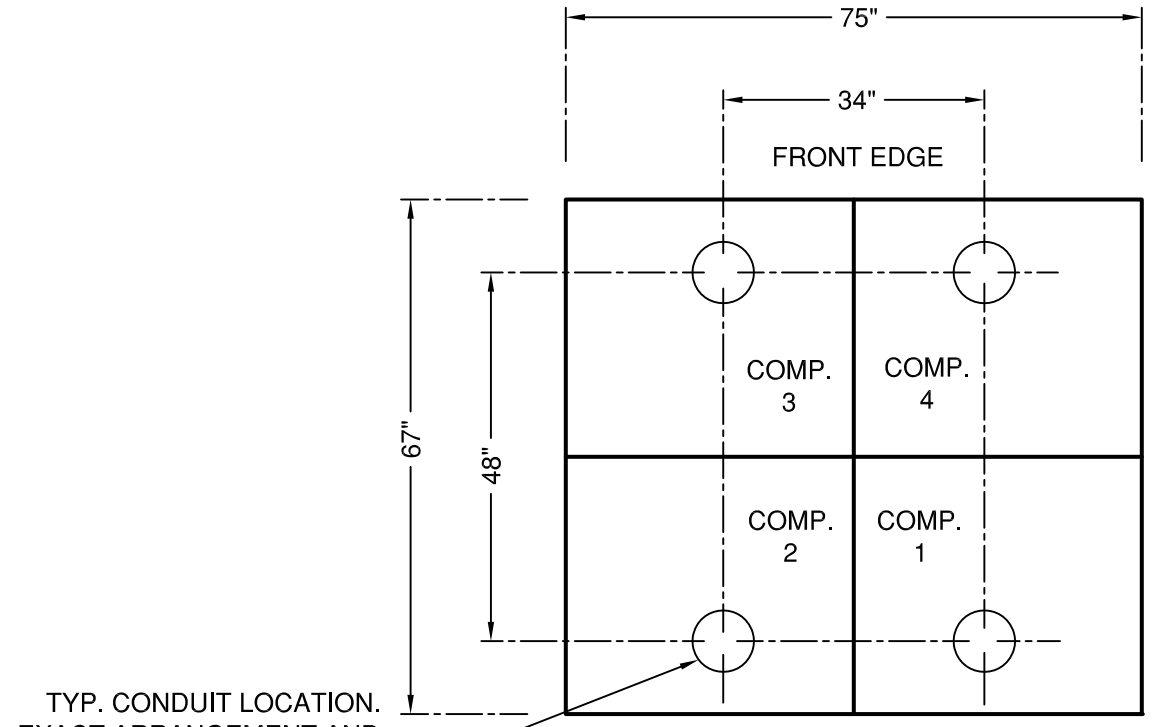


TYP. CONDUIT LOCATION. EXACT ARRANGEMENT AND ALIGNMENT OF CONDUITS SHALL BE SPECIFIED BY THE CITY UTILITIES DEPT. AT EACH LOCATION.

S & C PAD-MOUNTED GEAR, PME-9

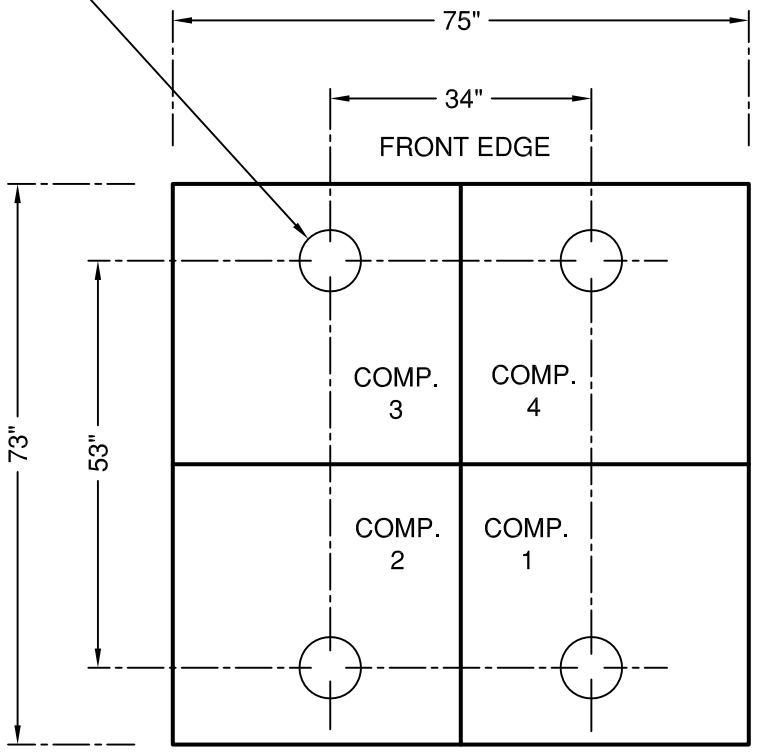


S & C PAD-MOUNTED GEAR, PME-10 & PME-11

| | | | |
|---|---|---|---|
| CITY OF GRAND ISLAND UTILITIES DEPARTMENT | DATE: 3/11/2009<br>DRAWN BY: K.J.M.<br>CHECKED BY: T.W.B. | SWITCHGEAR CONDUIT SPACING | PLAN EU-21 2 OF 3 |

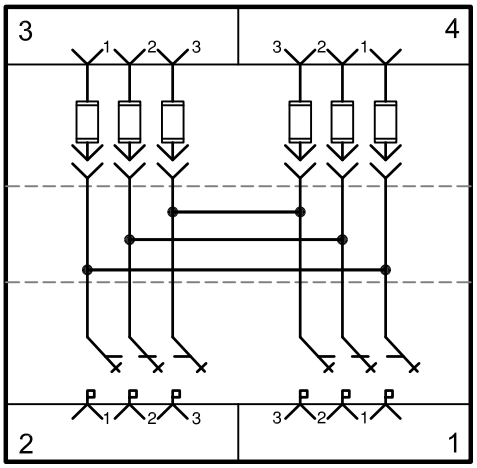


S & C PAD-MOUNTED GEAR- PME-9

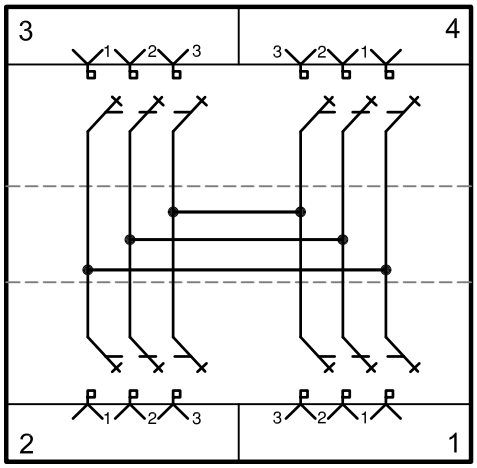


S & C PAD-MOUNTED GEAR- PME-10

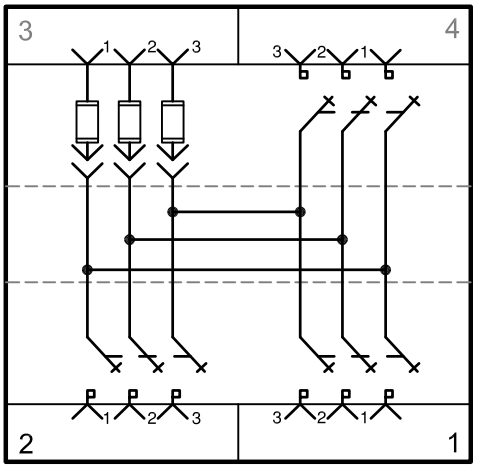


S & C PAD-MOUNTED GEAR- PME-11

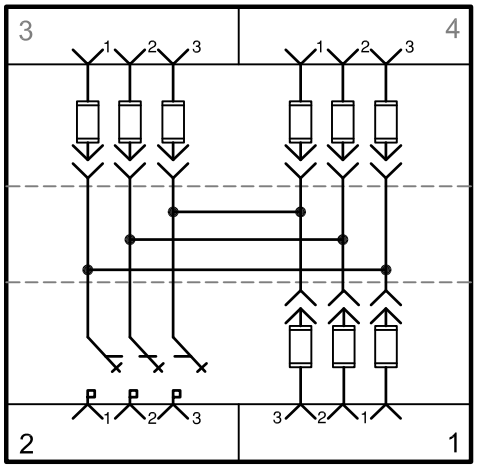


S & C PAD-MOUNTED GEAR- PME-12

| | | | |
|---|---|---|---|
| CITY OF GRAND ISLAND UTILITIES DEPARTMENT | DATE: 8/30/2012<br>DRAWN BY: K.J.M.<br>CHECKED BY: T.W.B. | PME SWITCHGEAR CIRCUIT CONFIGURATIONS | PLAN EU-21 3 OF 3 |

# 1Ø DEFERRAL CABINET

DURHAM Co. - TYPE B062588

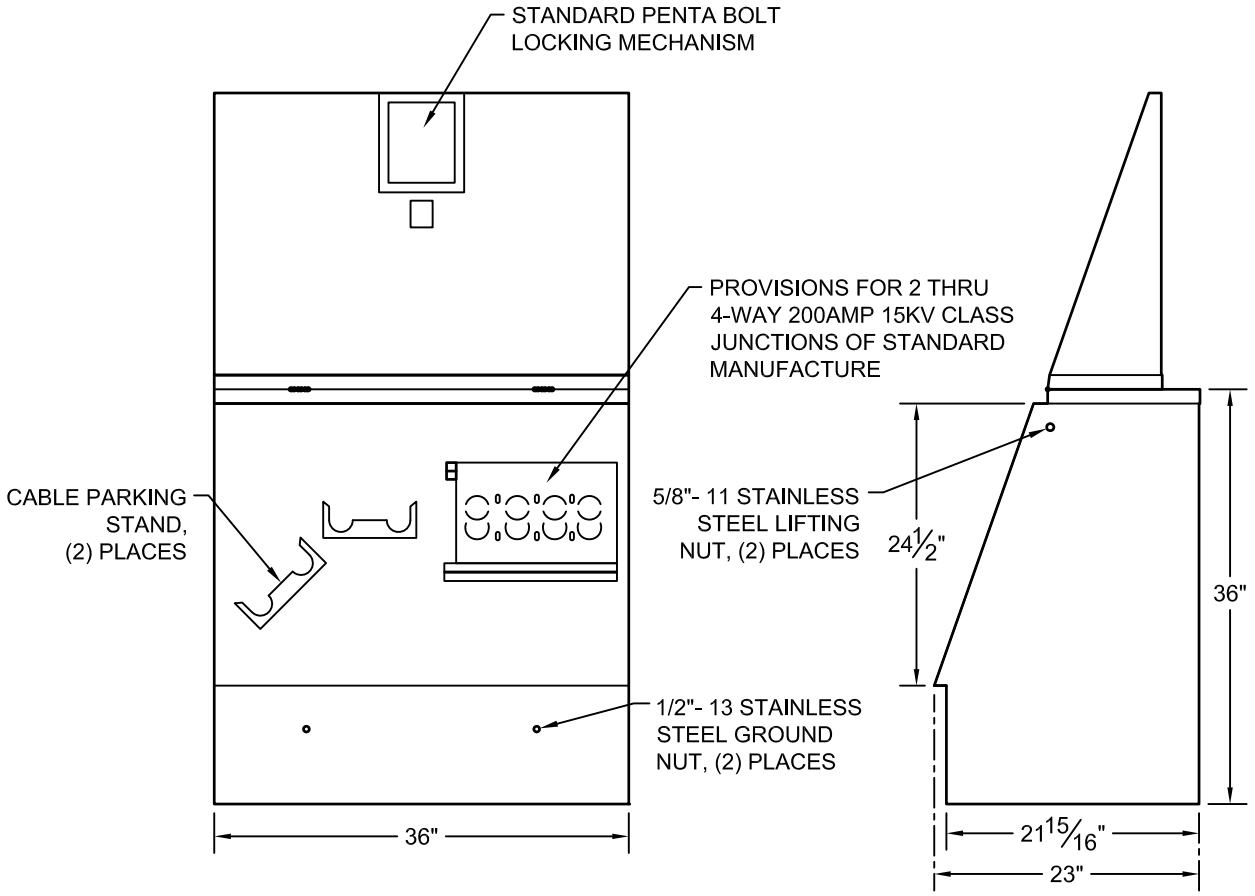


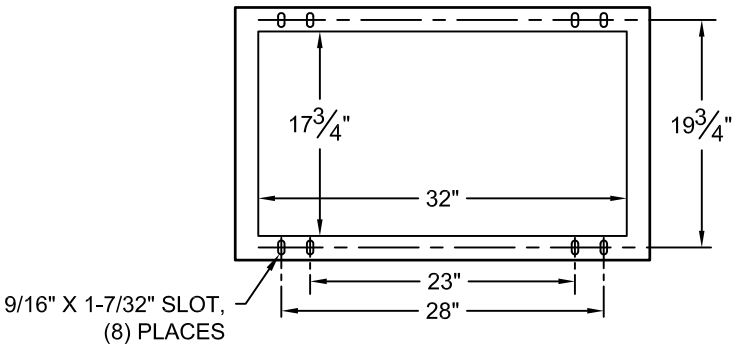


NOTES:

1. FABRICATED FROM 14 GA. GALVANIZED STEEL.
2. PAINTED MUNSELL 7GY 3.29/1.5 GREEN.
3. DESIGNED TO CONFORM TO ANSI C57.12.28.
4. ALL MATERIALS SHALL BE AS LISTED, OR AN APPROVED EQUAL. THE USE OF A BRAND NAME IS FOR THE PURPOSE OF DESCRIBING A STANDARD QUALITY, PERFORMANCE, AND CHARACTERISTIC DESIRED, AND IS NOT INTENDED TO LIMIT OR RESTRICT COMPETITION.

| | | | |
|---|---|---|---|
| CITY OF GRAND ISLAND UTILITIES DEPARTMENT | DATE: 12/06/2006<br>DRAWN BY: P.F.G.<br>CHECKED BY: T.W.B. | 1Ø DEFERRAL CABINET | PLAN EU - 23 |