CITY OF GRAND ISLAND

UTILITIES DEPARTMENT

Overhead

Current Revision: April 4, 2016

Overhead Electrical Standards

OVERHEAD

EO-1	3 PHASE TANGENT STRUCTURE (TS)
EO-1A	3 PHASE TANGENT STRUCTURE (TS), T-2 CONDUCTOR
EO-1B	3 PHASE TANGENT STRUCTURE (TS), T-2 CONDUCTOR, FIBERGLASS CROSS-ARM
EO-2	3 PHASE DEAD-END (DD)
EO-2A	3 PHASE JUNCTION STRUCTURE
EO-2B	3 PHASE DEAD-END (DD), T-2 CONDUCTOR
EO-3	3 PHASE DOUBLE CIRCUIT (DC)
EO-3A	3 PHASE DOUBLE CIRCUIT (DC), T-2 CONDUCTOR
EO-4	3 PHASE TRANSFORMER MOUNTING ARRANGEMENT (TM)
EO-5	3 PHASE SWITCH STRUCTURE (PTS)
E0-6	3 PHASE SWITCH RISER STRUCTURE (PTS,UG) 500 MCM POWER CABLE
EO-6A	3 PHASE SWITCH RISER STRUCTURE (PTS,UG) 750 MCM POWER CABLE
E0-7	3 PHASE SWITCH RISER STRUCTURE (PTS,UG) #2 OR 1/0 POWER CABLE
EO-7A	3 PHASE UNDERGROUND DISCONNECT (FUG)
EO-8	1 PHASE STRUCTURE (1PS)
EO-9	1 PHASE DEAD-END (1PDD)
EO-10	1 PHASE TRANSFORMER MOUNTING ARRANGEMENT (1PS / 1PTM)
EO-10A	3 PHASE TANGENT STRUCTURE W/ 1 PHASE TRANSFORMER MOUNTING (TS / 1 PTM)
EO-11	1 PHASE DISCONNECT RISER STRUCTURE (FUG)
EO-12	ANCHOR ASSEMBLY (AA)
EO-13	DISTRIBUTION POLE- WOOD
EO-14	SERVICE & GUY POLE- WOOD
EO-15	HOLE PATTERN FOR WOOD POLE WITH DDE, CTS, AND PTS
EO-16	HOLE PATTERN FOR WOOD POLE WITH CAPACITORS
EO-17	HOLE PATTERN FOR ONE PIECE 35' STEEL POLE
EO-18	HOLE PATTERN FOR ONE PIECE 40' STEEL POLE
E0-19	HOLE PATTERN FOR ONE PIECE 45' STEEL POLE
EO-20	34.5KV / 13.8KV POLE DETAIL
EO-21	LIGHTING CONTROL CENTER- TYPE "D"
EO-22	LIGHTING / POWER CONTROL CENTER- TYPE "R"
EO-23	SECONDARY STAND-OFF BRACKET
EO-24	SECONDARY STAND-OFF BRACKET- METER PEDESTAL

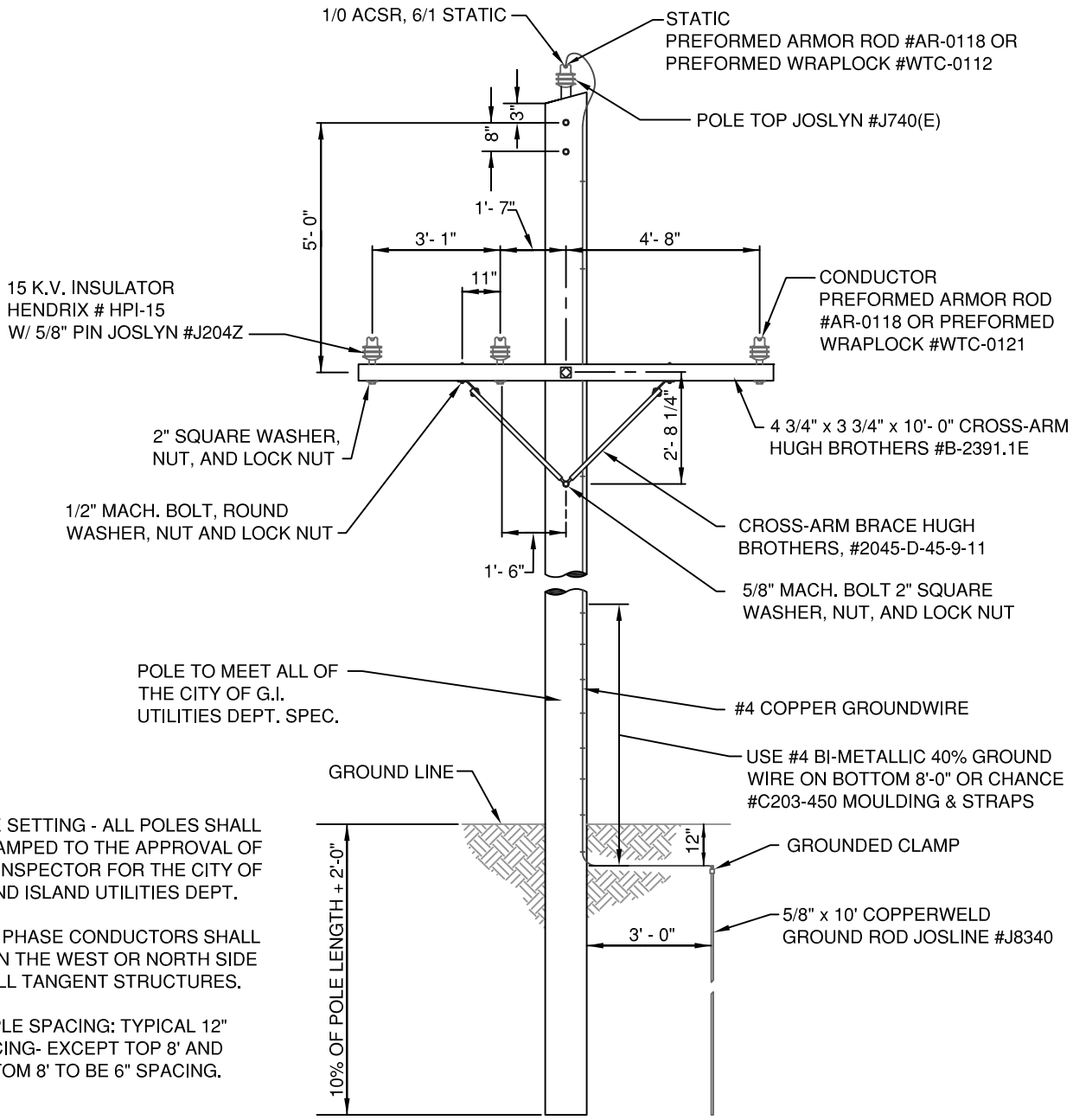

NOTE:

1. POLE SETTING - ALL POLES SHALL BE TAMPED TO THE APPROVAL OF THE INSPECTOR FOR THE CITY OF GRAND ISLAND UTILITIES DEPT.
2. TWO PHASE CONDUCTORS SHALL BE ON THE WEST OR NORTH SIDE OF ALL TANGENT STRUCTURES.
3. STAPLE SPACING: TYPICAL 12" SPACING- EXCEPT TOP 8' AND BOTTOM 8' TO BE 6" SPACING.

NOTE:
ALL MATERIALS SHALL BE AS LISTED, OR AN APPROVED EQUAL. THE USE OF A BRAND NAME IS FOR THE PURPOSE OF DESCRIBING A STANDARD QUALITY, PERFORMANCE, AND CHARACTERISTIC DESIRED, AND IS NOT INTENDED TO LIMIT OR RESTRICT COMPETITION.

REVISED : 12/27/2011

CITY OF GRAND ISLAND UTILITIES DEPARTMENT	DATE : 4/12/96 DRAWN BY : P.S.L. CHECKED BY : T.W.B.	3 Ø TANGENT STRUCTURE (TS)	PLAN EO - 1

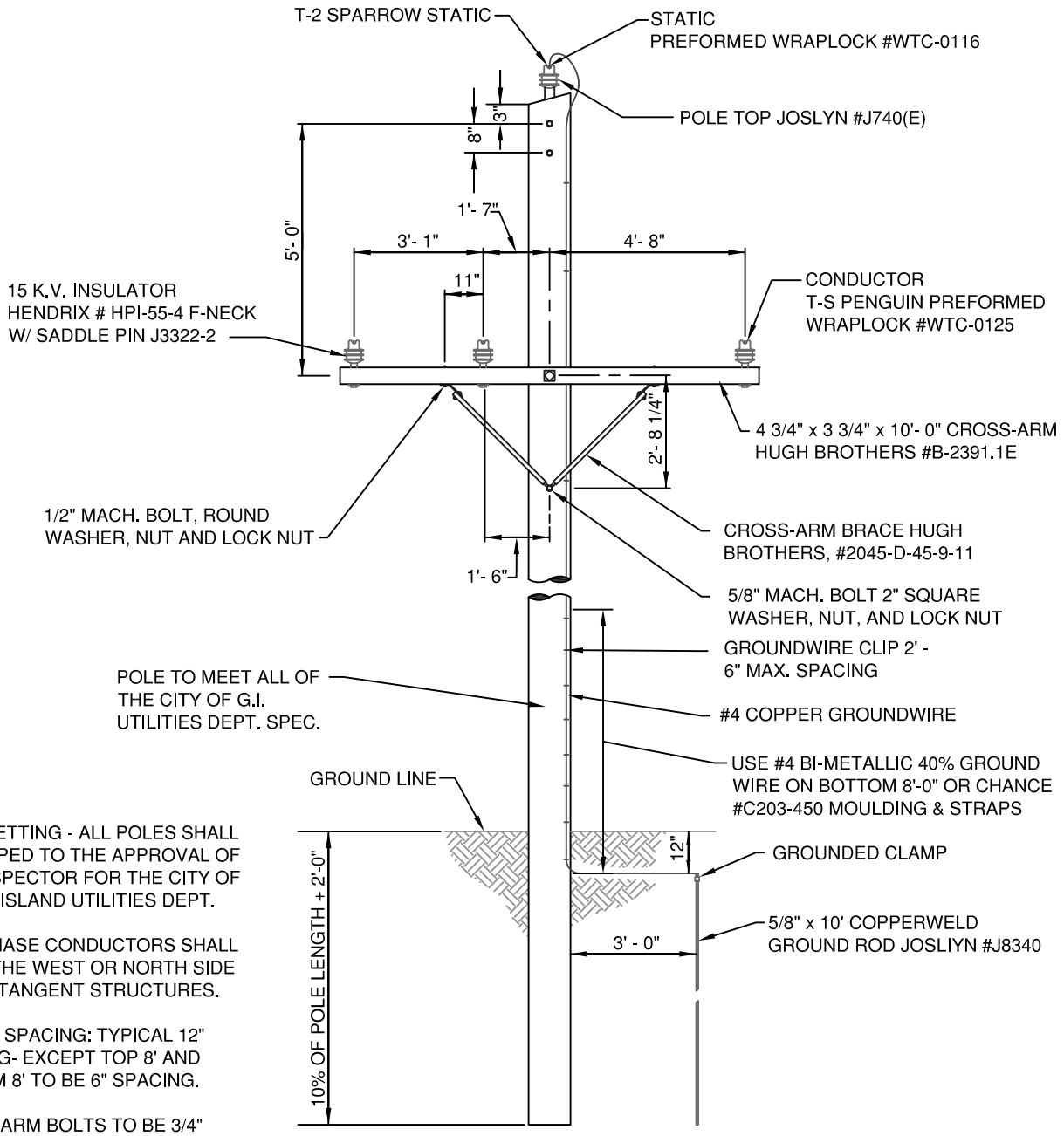

NOTE:

1. POLE SETTING - ALL POLES SHALL BE TAMPED TO THE APPROVAL OF THE INSPECTOR FOR THE CITY OF GRAND ISLAND UTILITIES DEPT.
2. TWO PHASE CONDUCTORS SHALL BE ON THE WEST OR NORTH SIDE OF ALL TANGENT STRUCTURES.
3. STAPLE SPACING: TYPICAL 12" SPACING- EXCEPT TOP 8' AND BOTTOM 8' TO BE 6" SPACING.
4. CROSS-ARM BOLTS TO BE 3/4" FOR T-2 CONTRUCTION.

NOTE:
ALL MATERIALS SHALL BE AS LISTED, OR AN APPROVED EQUAL. THE USE OF A BRAND NAME IS FOR THE PURPOSE OF DESCRIBING A STANDARD QUALITY, PERFORMANCE, AND CHARACTERISTIC DESIRED, AND IS NOT INTENDED TO LIMIT OR RESTRICT COMPETITION.

REVISED : 12/27/2011

CITY OF GRAND ISLAND UTILITIES DEPARTMENT	DATE : 4/12/96 DRAWN BY : P.S.L. CHECKED BY : T.W.B.	3 Ø TANGENT STRUCTURE (TS) T-2 CONDUCTOR	PLAN EO - 1A

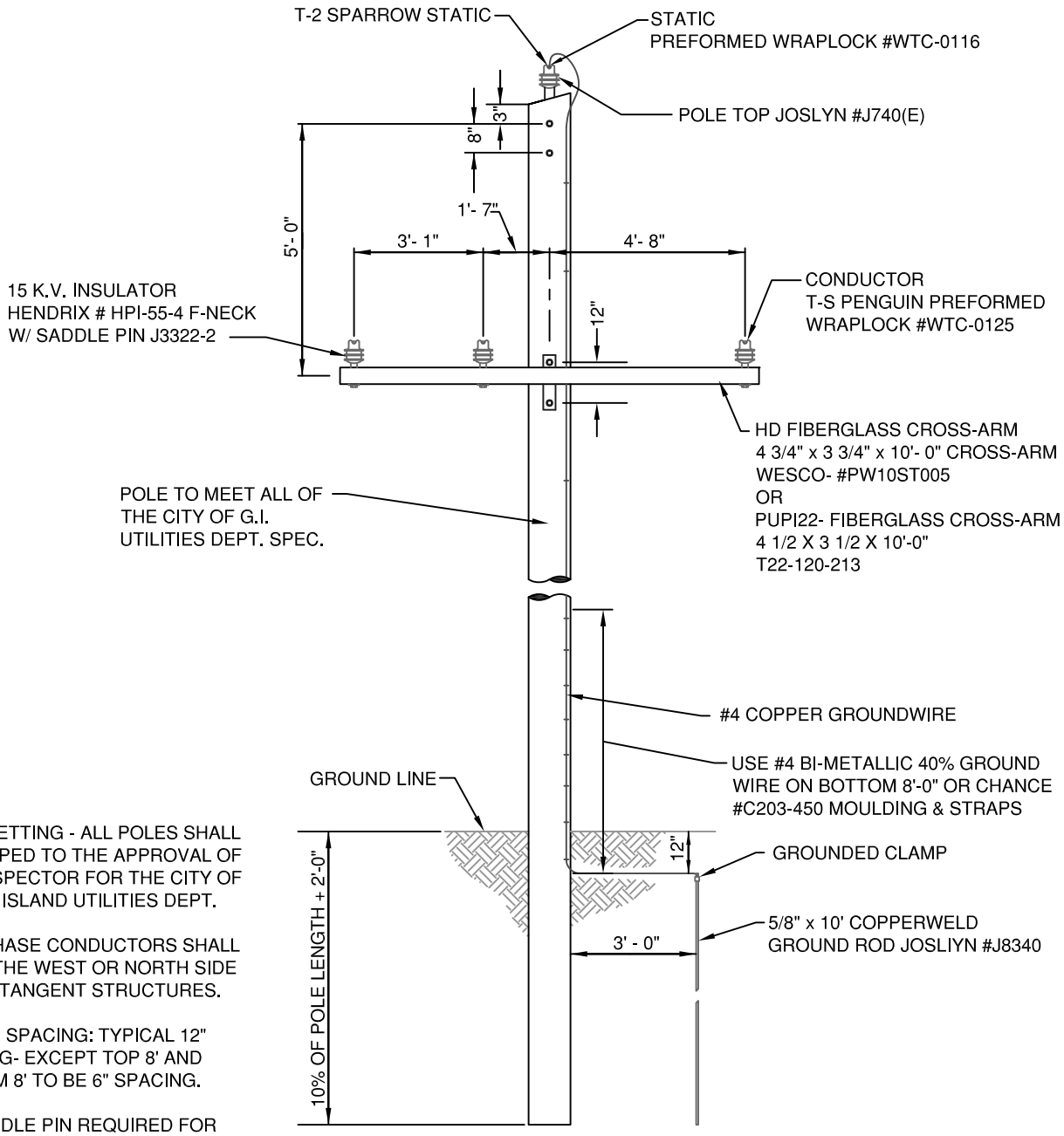

NOTE:

1. POLE SETTING - ALL POLES SHALL BE TAMPED TO THE APPROVAL OF THE INSPECTOR FOR THE CITY OF GRAND ISLAND UTILITIES DEPT.
2. TWO PHASE CONDUCTORS SHALL BE ON THE WEST OR NORTH SIDE OF ALL TANGENT STRUCTURES.
3. STAPLE SPACING: TYPICAL 12" SPACING- EXCEPT TOP 8' AND BOTTOM 8' TO BE 6" SPACING.
4. NO SADDLE PIN REQUIRED FOR PUPI FIBERGLASS CROSS ARMS.

REVISED : 12/27/2011

CITY OF GRAND ISLAND UTILITIES DEPARTMENT	DATE : 12/6/11 DRAWN BY : K.J.M. CHECKED BY : T.W.B.	3 Ø TANGENT FIBERGLASS ARM T-2 CONDUCTOR	PLAN EO - 1B

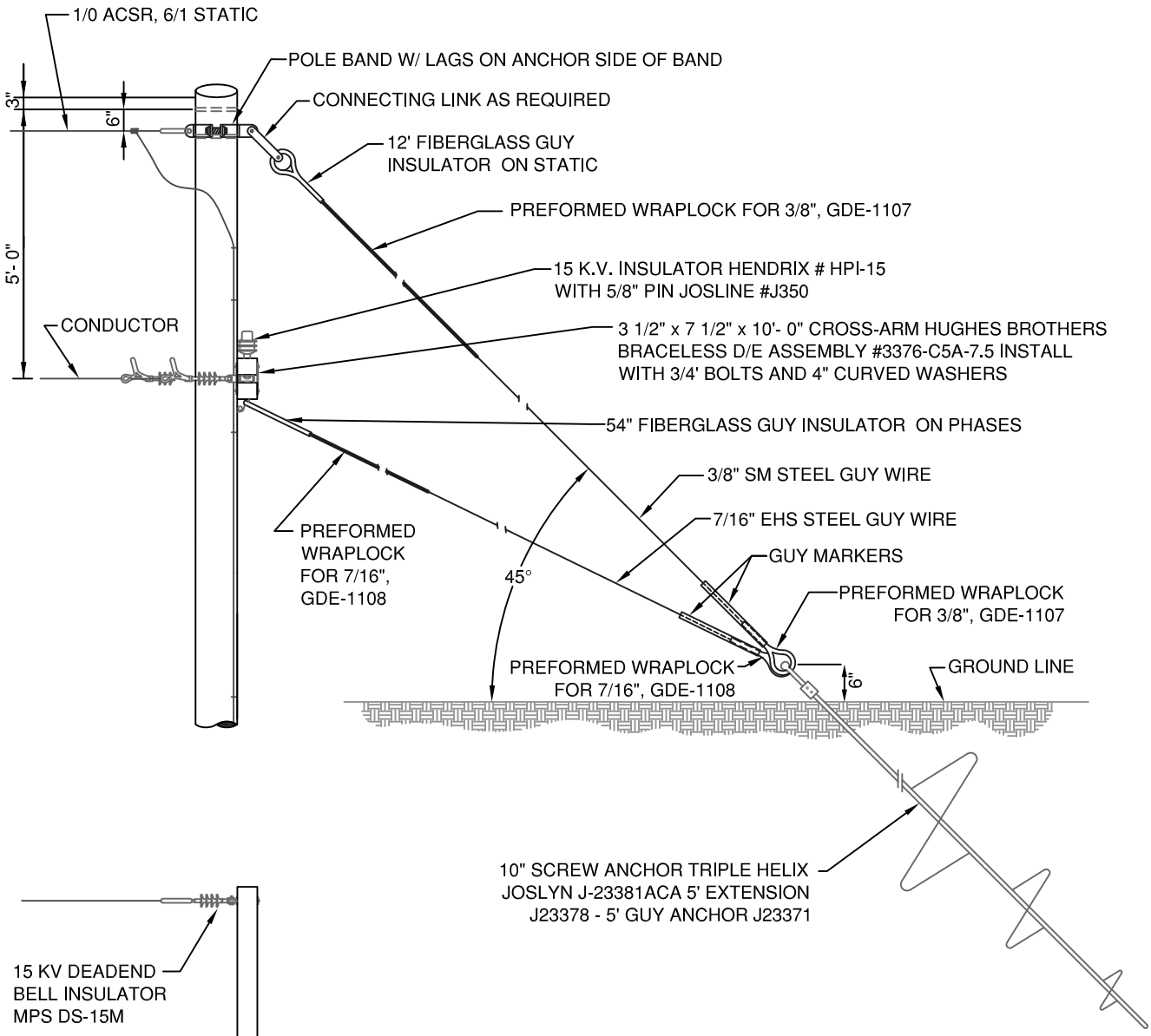

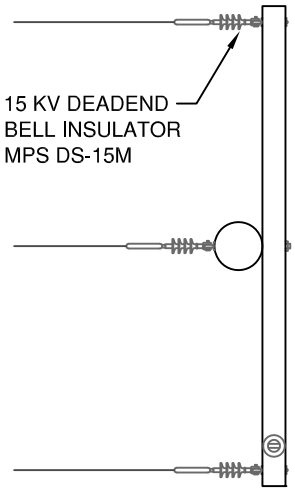

NOTE:
ALL MATERIALS SHALL BE AS LISTED, OR AN APPROVED EQUAL. THE USE OF A BRAND NAME IS FOR THE PURPOSE OF DESCRIBING A STANDARD QUALITY, PERFORMANCE, AND CHARACTERISTIC DESIRED, AND IS NOT INTENDED TO LIMIT OR RESTRICT COMPETITION.

REVISED : 12/27/2011

CITY OF GRAND ISLAND UTILITIES DEPARTMENT	DATE : 4/12/96 DRAWN BY : P.S.L. CHECKED BY : T.W.B.	3 Ø DEAD-END STRUCTURE (DE)	PLAN EO - 2

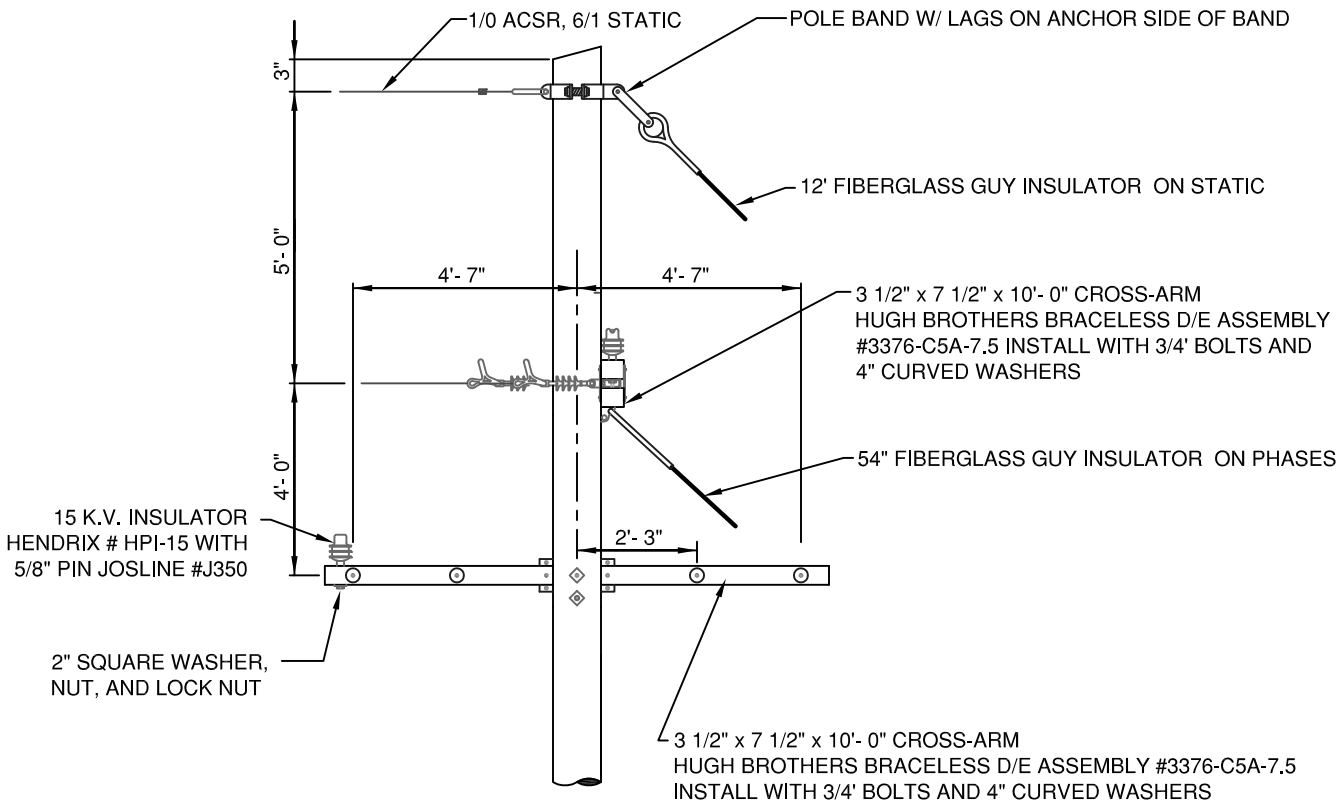

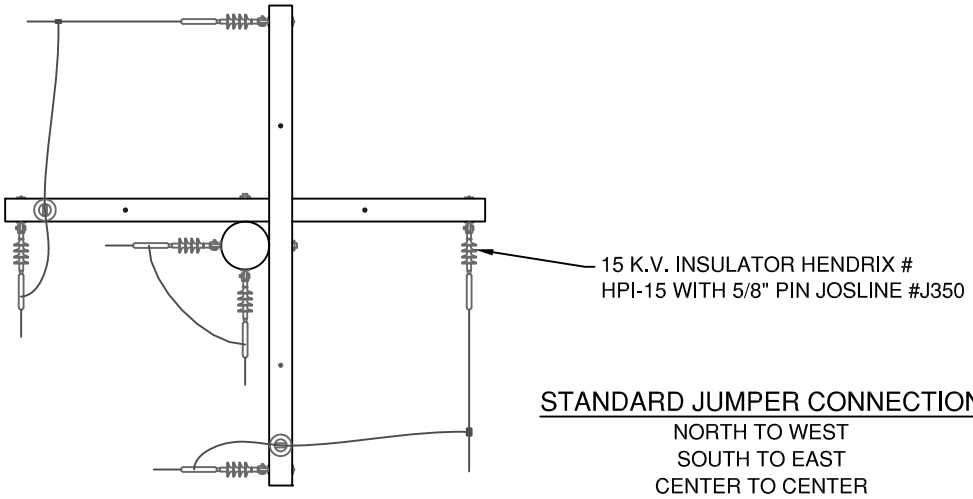

STANDARD JUMPER CONNECTION

NORTH TO WEST
SOUTH TO EAST
CENTER TO CENTER

NOTE:
ALL MATERIALS SHALL BE AS LISTED, OR AN APPROVED EQUAL. THE USE OF A BRAND NAME IS FOR THE PURPOSE OF DESCRIBING A STANDARD QUALITY, PERFORMANCE, AND CHARACTERISTIC DESIRED, AND IS NOT INTENDED TO LIMIT OR RESTRICT COMPETITION.

REVISED : 12/27/2011

CITY OF GRAND ISLAND UTILITIES DEPARTMENT	DATE : 4/12/96 DRAWN BY : P.S.L. CHECKED BY : T.W.B.	3 Ø JUNCTION STRUCTURE	PLAN EO - 2A

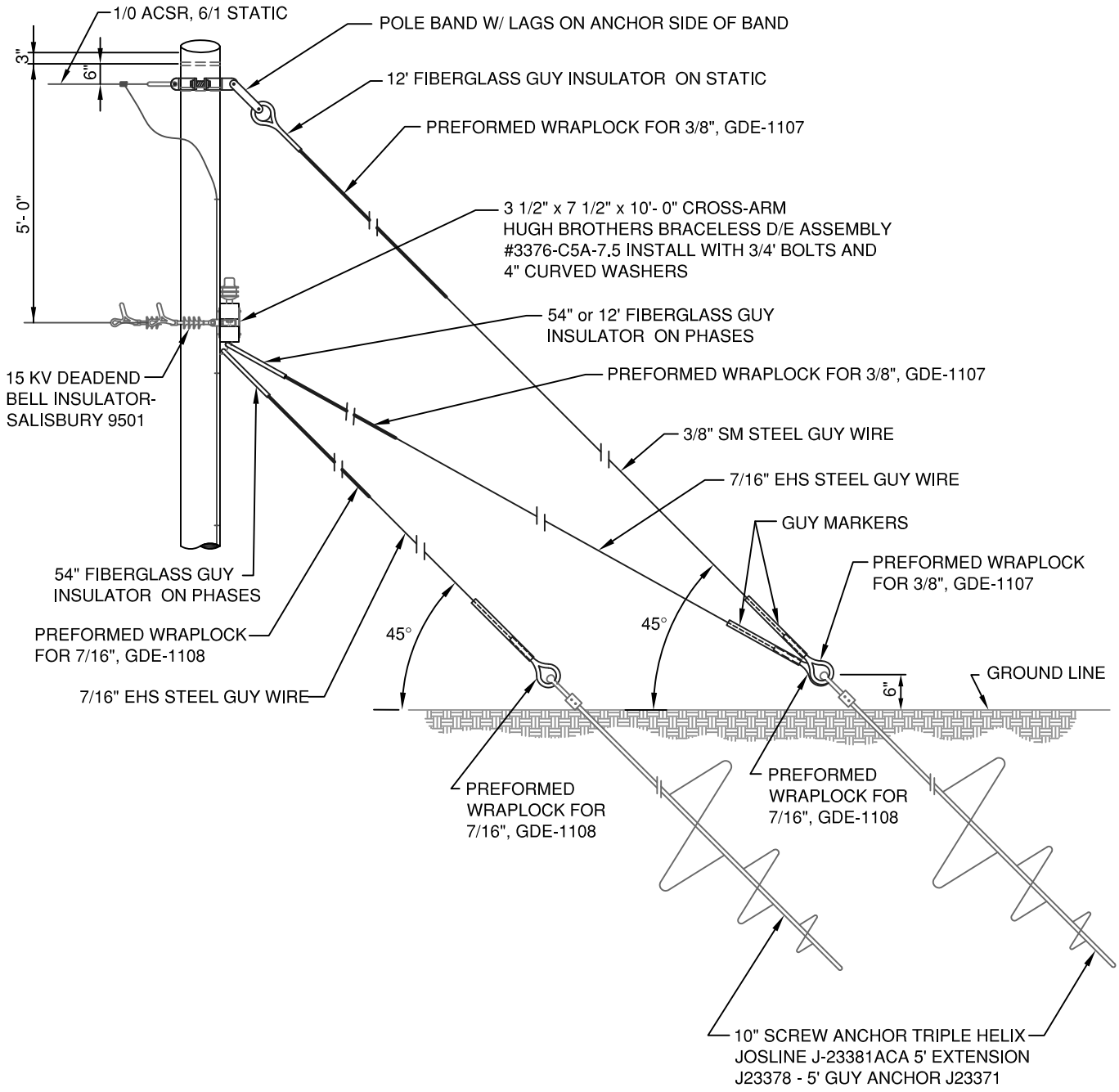

NOTE:
ALL MATERIALS SHALL BE AS LISTED, OR AN APPROVED EQUAL. THE USE OF A BRAND NAME IS FOR THE PURPOSE OF DESCRIBING A STANDARD QUALITY, PERFORMANCE, AND CHARACTERISTIC DESIRED, AND IS NOT INTENDED TO LIMIT OR RESTRICT COMPETITION.

REVISED: 12/27/2011

CITY OF GRAND ISLAND UTILITIES DEPARTMENT	DATE : 4/12/96 DRAWN BY : P.S.L. CHECKED BY : T.W.B.	3 Ø DEAD-END (DE) STRUCTURE T-2 CONDUCTOR	PLAN EO - 2B

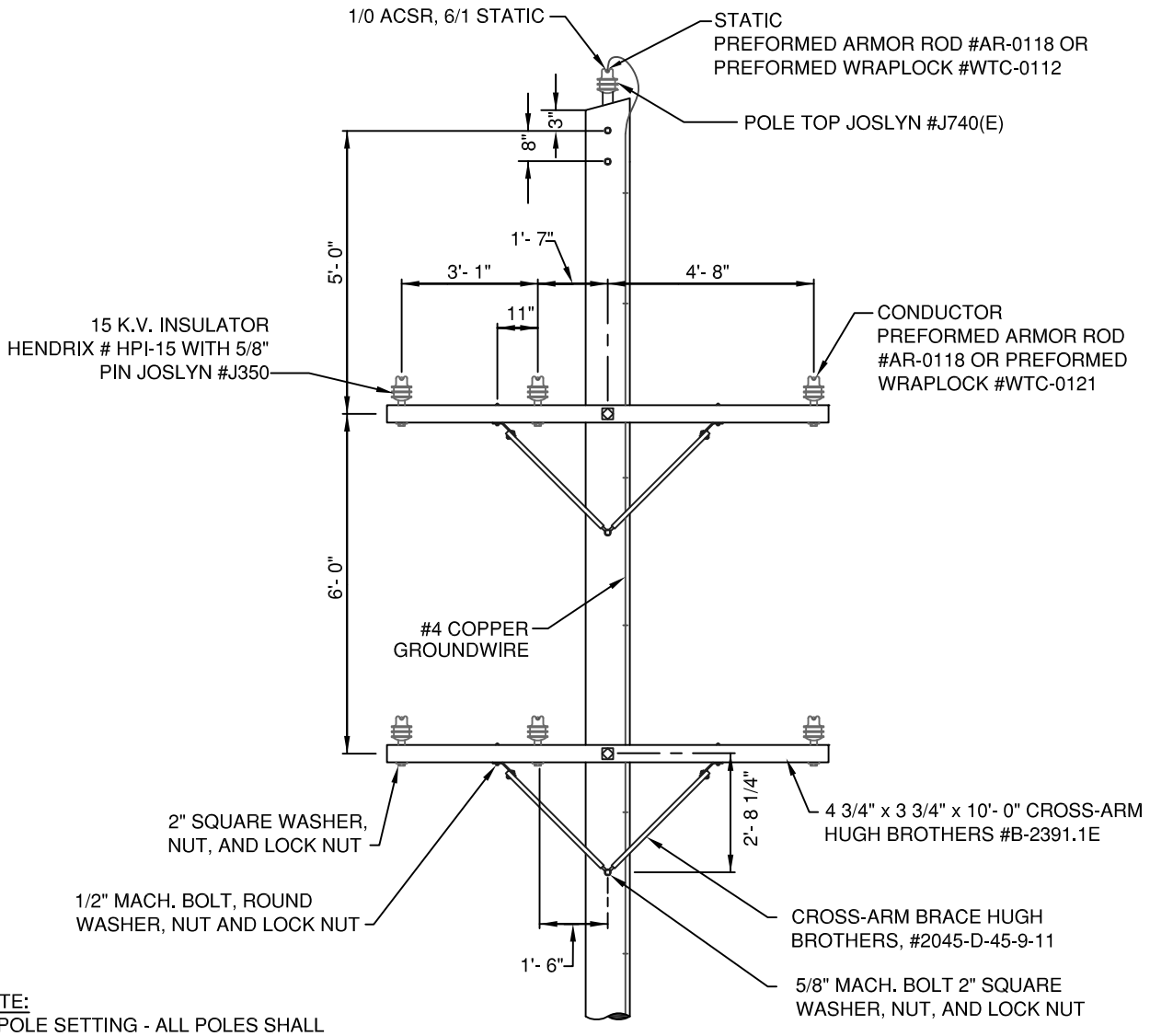

NOTE:

1. POLE SETTING - ALL POLES SHALL BE TAMPED TO THE APPROVAL OF THE INSPECTOR FOR THE CITY OF GRAND ISLAND UTILITIES DEPT.

2. TWO PHASE CONDUCTORS SHALL BE ON THE WEST OR NORTH SIDE OF ALL TANGENT STRUCTURES.

3. STAPLE SPACING: TYPICAL 12" SPACING- EXCEPT TOP 8' AND BOTTOM 8' TO BE 6" SPACING.

NOTE:
ALL MATERIALS SHALL BE AS LISTED, OR AN APPROVED EQUAL. THE USE OF A BRAND NAME IS FOR THE PURPOSE OF DESCRIBING A STANDARD QUALITY, PERFORMANCE, AND CHARACTERISTIC DESIRED, AND IS NOT INTENDED TO LIMIT OR RESTRICT COMPETITION.

REVISED: 112/27/2011

CITY OF GRAND ISLAND UTILITIES DEPARTMENT	DATE : 3/2/2005 DRAWN BY : K.J.M. CHECKED BY : T.W.B.	3 Ø DOUBLE CIRCUIT (DC)	PLAN EO - 3

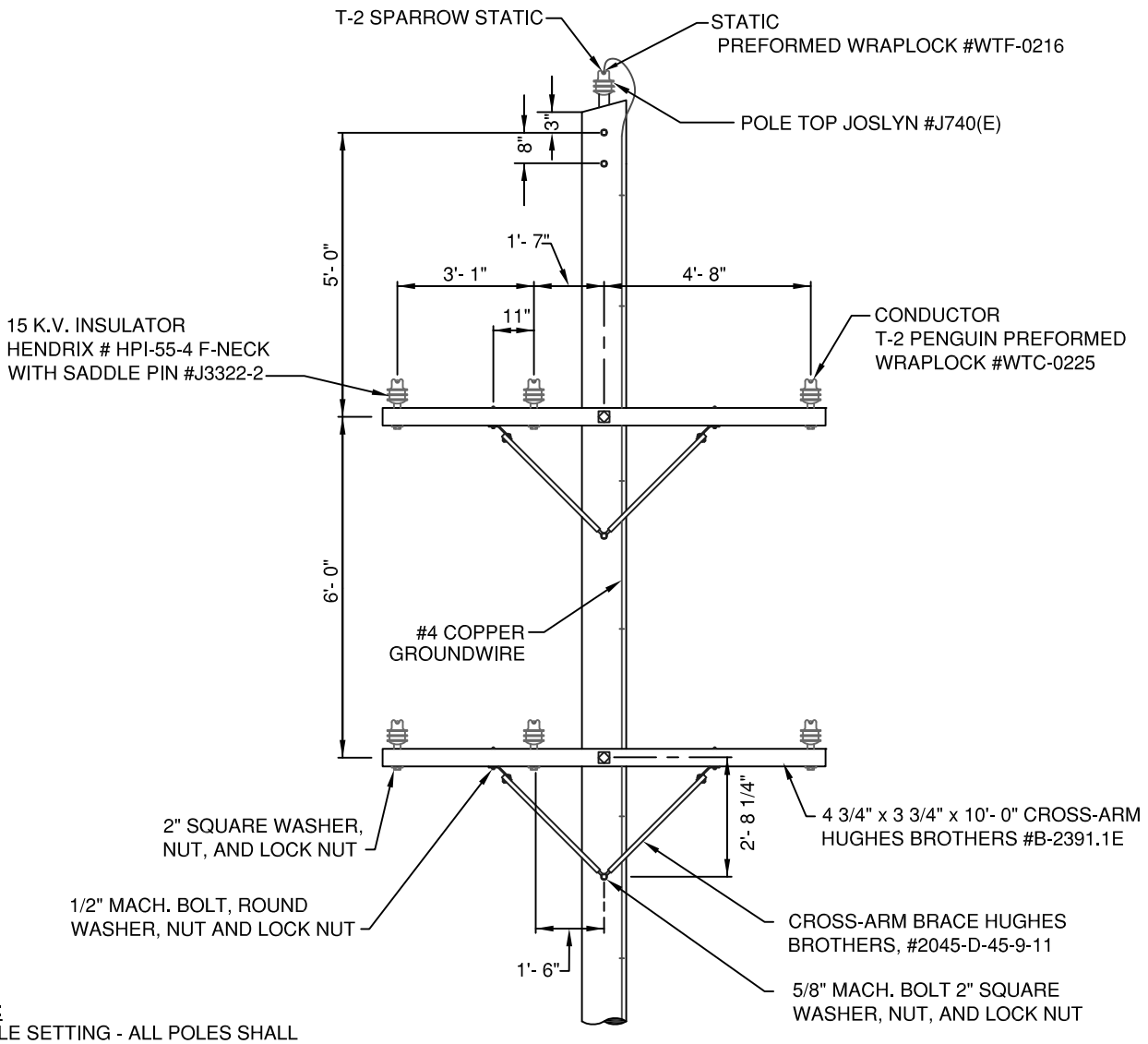

NOTE:

1. POLE SETTING - ALL POLES SHALL BE TAMPED TO THE APPROVAL OF THE INSPECTOR FOR THE CITY OF GRAND ISLAND UTILITIES DEPT.

2. TWO PHASE CONDUCTORS SHALL BE ON THE WEST OR NORTH SIDE OF ALL TANGENT STRUCTURES.

3. STAPLE SPACING: TYPICAL 12" SPACING- EXCEPT TOP 14' AND BOTTOM 8' TO BE 6" SPACING ON DOUBLE CIRCUIT STRUCTURES.

4. CROSS ARM BOLTS TO BE 3/4" FOR T-2 CONSTRUCTION.

NOTE:
ALL MATERIALS SHALL BE AS LISTED, OR AN APPROVED EQUAL. THE USE OF A BRAND NAME IS FOR THE PURPOSE OF DESCRIBING A STANDARD QUALITY, PERFORMANCE, AND CHARACTERISTIC DESIRED, AND IS NOT INTENDED TO LIMIT OR RESTRICT COMPETITION.

REVISED: 12/27/2011

CITY OF GRAND ISLAND UTILITIES DEPARTMENT	DATE : 3/2/2005 DRAWN BY : K.J.M. CHECKED BY : T.W.B.	3 Ø DOUBLE CIRCUIT (DC) T-2 CONDUCTOR	PLAN EO - 3A

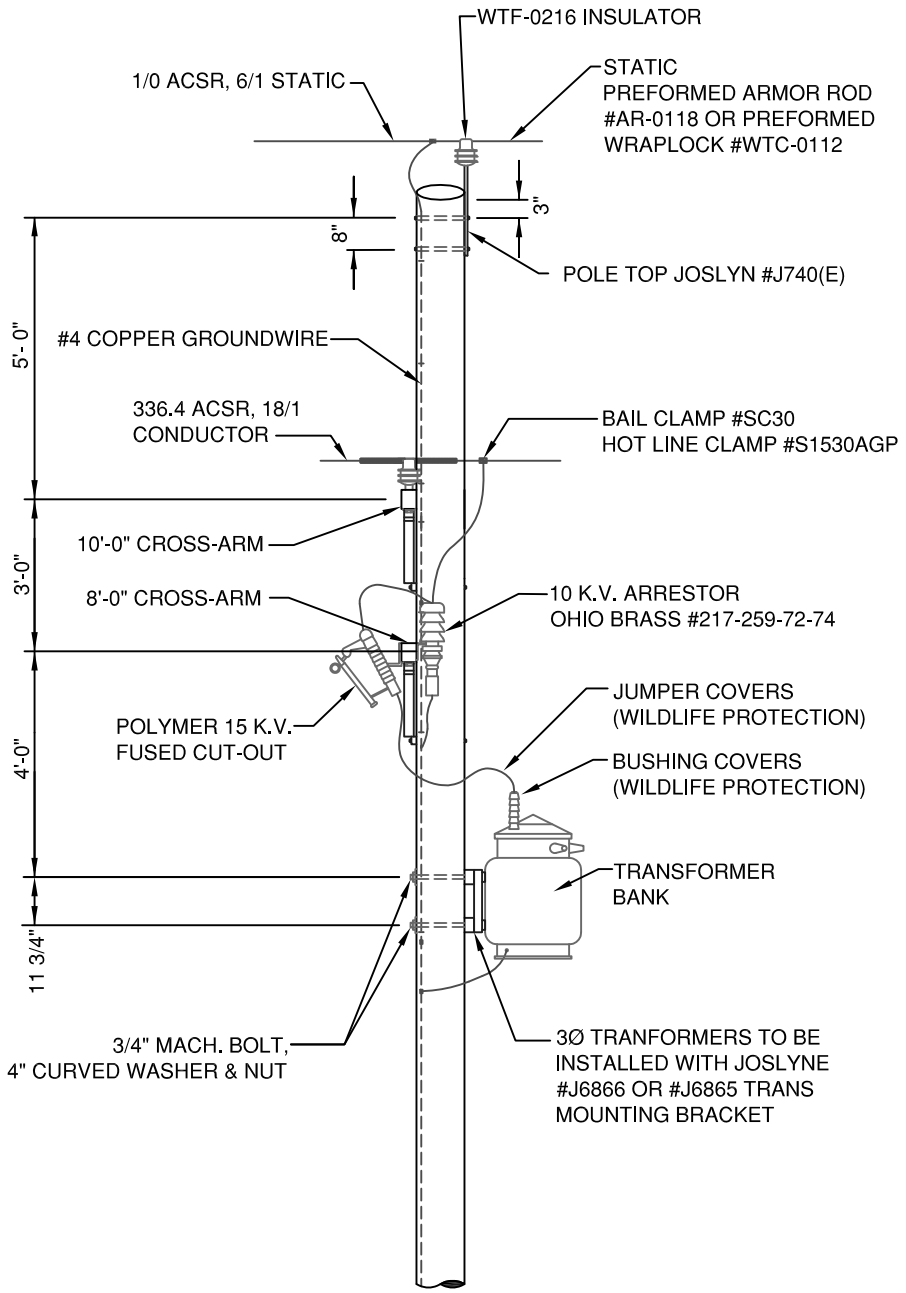

NOTE:
1. GROUNDING CLAMP
2. 5/8" X 10' GROUNDING ROD
3. SEE STANDARD PLAN EO-01 GROUNDING LAYOUT

NOTE:
ALL MATERIALS SHALL BE AS LISTED, OR AN APPROVED EQUAL. THE USE OF A BRAND NAME IS FOR THE PURPOSE OF DESCRIBING A STANDARD QUALITY, PERFORMANCE, AND CHARACTERISTIC DESIRED, AND IS NOT INTENDED TO LIMIT OR RESTRICT COMPETITION.

REVISED: 12/27/2011

CITY OF GRAND ISLAND UTILITIES DEPARTMENT	DATE : 4/12/96 DRAWN BY : P.S.L. CHECKED BY : T.W.B.	3Ø XFMR MOUNTING ON 3Ø STRUCTURE (TM / TS)	PLAN EO - 4

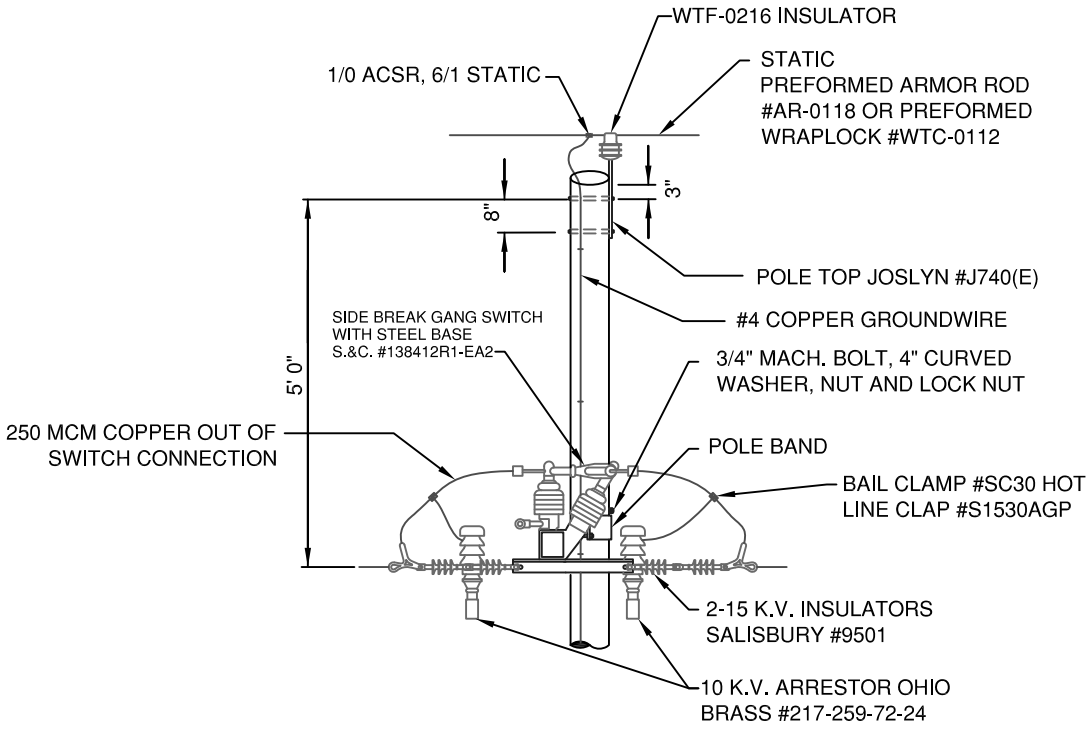

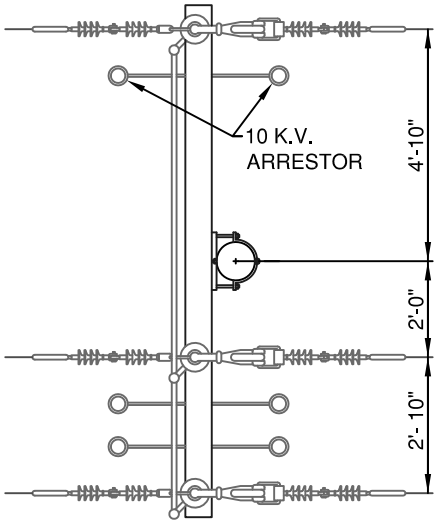

NOTE:
1. USE CAD-WELD FOR GROUND ROD CONNECTION.
2. 5/8" X 10' GROUNDING ROD.
3. SEE STANDARD PLAN EO-01 GROUNDING LAYOUT.

NOTE:
ALL MATERIALS SHALL BE AS LISTED, OR AN APPROVED EQUAL. THE USE OF A BRAND NAME IS FOR THE PURPOSE OF DESCRIBING A STANDARD QUALITY, PERFORMANCE, AND CHARACTERISTIC DESIRED, AND IS NOT INTENDED TO LIMIT OR RESTRICT COMPETITION.

REVISED: 12/27/2011

CITY OF GRAND ISLAND UTILITIES DEPARTMENT	DATE : 4/12/96 DRAWN BY : P.S.L. CHECKED BY : T.W.B.	3Ø SWITCH STRUCTURE (P.T.S.)	PLAN EO - 5

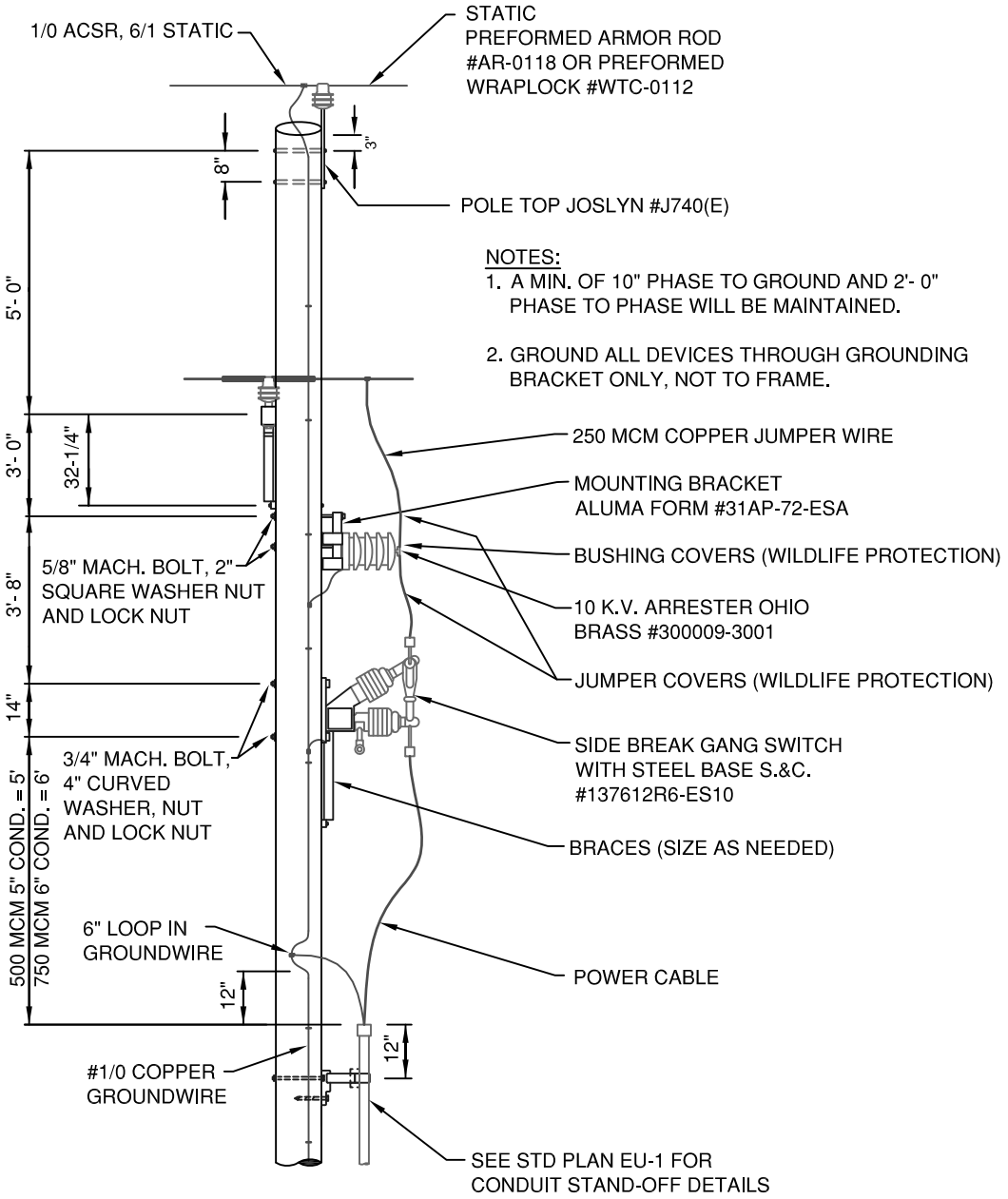

NOTES:
1. A MIN. OF 10" PHASE TO GROUND AND 2'- 0" PHASE TO PHASE WILL BE MAINTAINED.
2. GROUND ALL DEVICES THROUGH GROUNDING BRACKET ONLY, NOT TO FRAME.

NOTES:
1. USE CAD-WELD FOR GROUND ROD CONNECTION.
2. 2-10' GROUNDING ROD SECTIONAL #K9160 GROUNDING ROD THREADED COUPLING #CR58.

NOTE:
ALL MATERIALS SHALL BE AS LISTED, OR AN APPROVED EQUAL. THE USE OF A BRAND NAME IS FOR THE PURPOSE OF DESCRIBING A STANDARD QUALITY, PERFORMANCE, AND CHARACTERISTIC DESIRED, AND IS NOT INTENDED TO LIMIT OR RESTRICT COMPETITION.

REVISED: 12/27/2011

CITY OF GRAND ISLAND UTILITIES DEPARTMENT	DATE : 4/12/96 DRAWN BY : P.S.L. CHECKED BY : T.W.B.	3Ø SWITCH RISER STRUCTURE 500 MCM POWER CABLE (P.T.S./UG.)	PLAN EO - 6

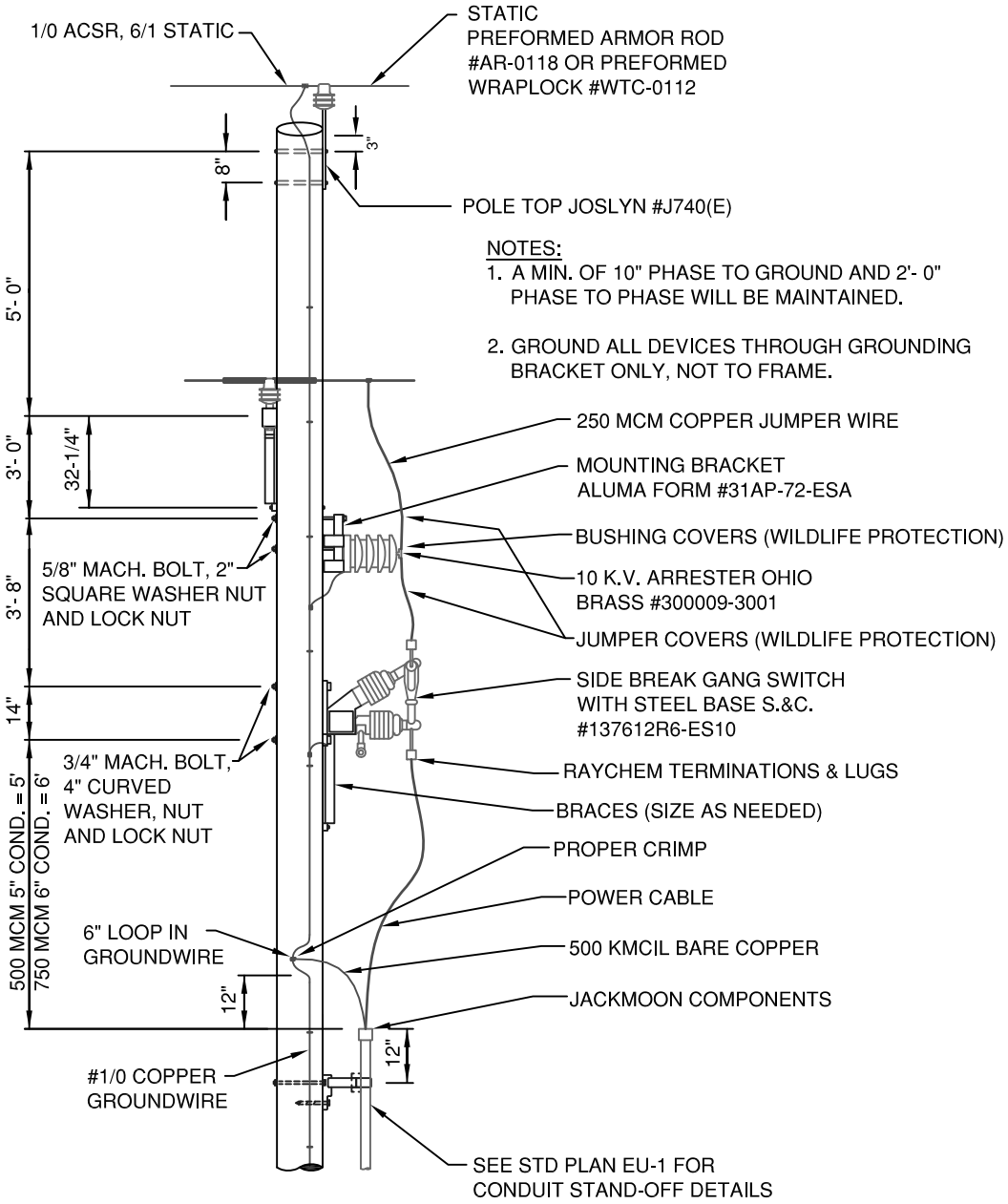

NOTES:
1. A MIN. OF 10" PHASE TO GROUND AND 2'- 0" PHASE TO PHASE WILL BE MAINTAINED.
2. GROUND ALL DEVICES THROUGH GROUNDING BRACKET ONLY, NOT TO FRAME.

NOTES:
1. USE CAD-WELD FOR GROUND ROD CONNECTION.
2. 2-10' GROUNDING ROD SECTIONAL #K9160 GROUNDING ROD THREADED COUPLING #CR58.

NOTE:
ALL MATERIALS SHALL BE AS LISTED, OR AN APPROVED EQUAL. THE USE OF A BRAND NAME IS FOR THE PURPOSE OF DESCRIBING A STANDARD QUALITY, PERFORMANCE, AND CHARACTERISTIC DESIRED, AND IS NOT INTENDED TO LIMIT OR RESTRICT COMPETITION.

REVISED: 12/27/2011

CITY OF GRAND ISLAND UTILITIES DEPARTMENT	DATE : 4/12/96 DRAWN BY : P.S.L. CHECKED BY : T.W.B.	3Ø SWITCH RISER STRUCTURE 750 MCM POWER CABLE (P.T.S./UG.)	PLAN EO - 6A

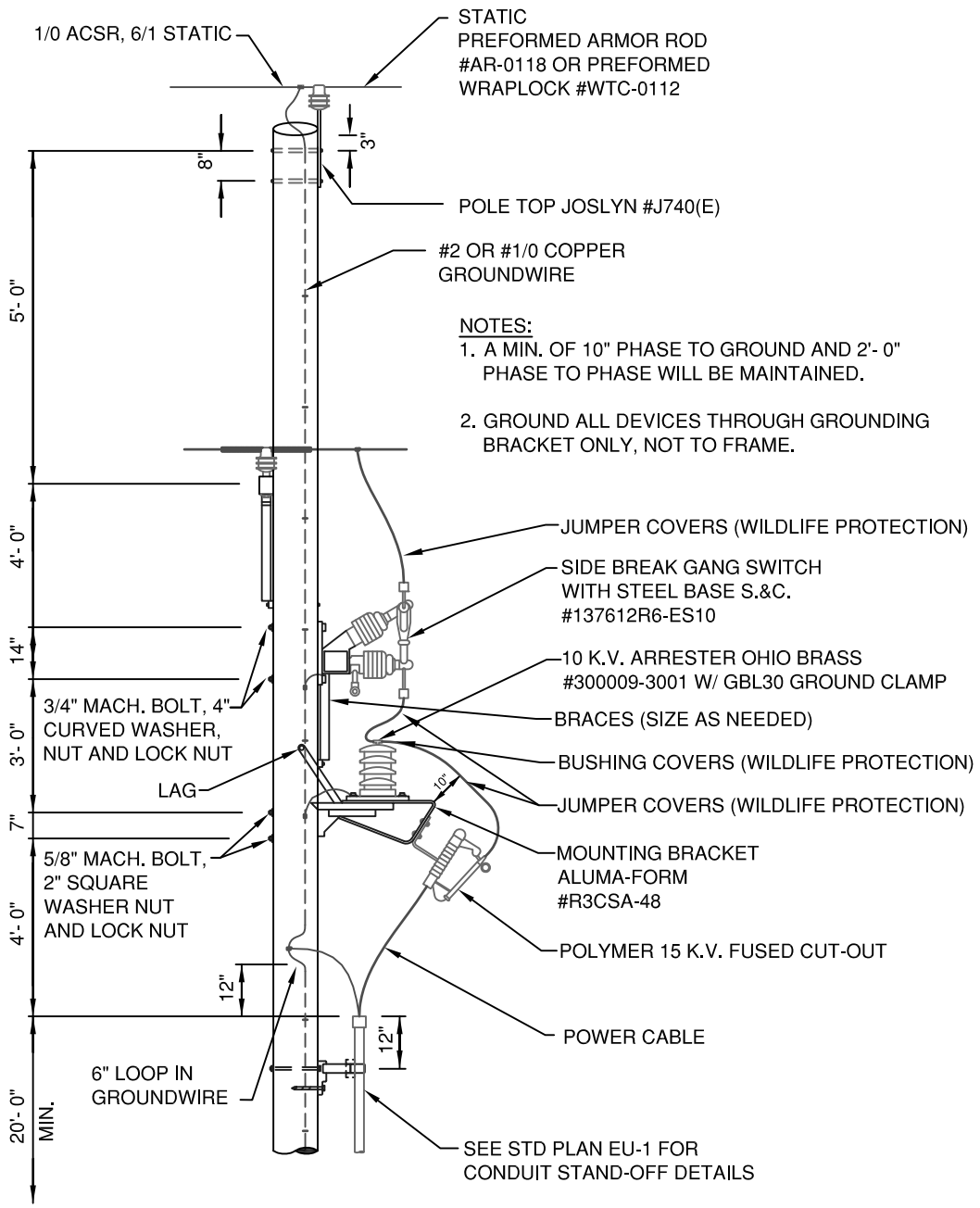

NOTES:
1. A MIN. OF 10" PHASE TO GROUND AND 2'- 0" PHASE TO PHASE WILL BE MAINTAINED.
2. GROUND ALL DEVICES THROUGH GROUNDING BRACKET ONLY, NOT TO FRAME.

NOTES:
1. USE CAD-WELD FOR GROUND ROD CONNECTION.
2. 2-10' GROUNDING ROD SECTIONAL #K9160
GROUNDING ROD THREADED COUPLING #CR58.

NOTE:
ALL MATERIALS SHALL BE AS LISTED, OR AN APPROVED EQUAL. THE USE OF A BRAND NAME IS FOR THE PURPOSE OF DESCRIBING A STANDARD QUALITY, PERFORMANCE, AND CHARACTERISTIC DESIRED, AND IS NOT INTENDED TO LIMIT OR RESTRICT COMPETITION.

REVISED: 12/27/2011

CITY OF GRAND ISLAND UTILITIES DEPARTMENT	DATE : 4/12/96 DRAWN BY : P.S.L. CHECKED BY : T.W.B.	3Ø U.G. SWITCH 4/0 OR 1/0 POWER CABLE (P.T.S.,U.G.)	PLAN EO - 7

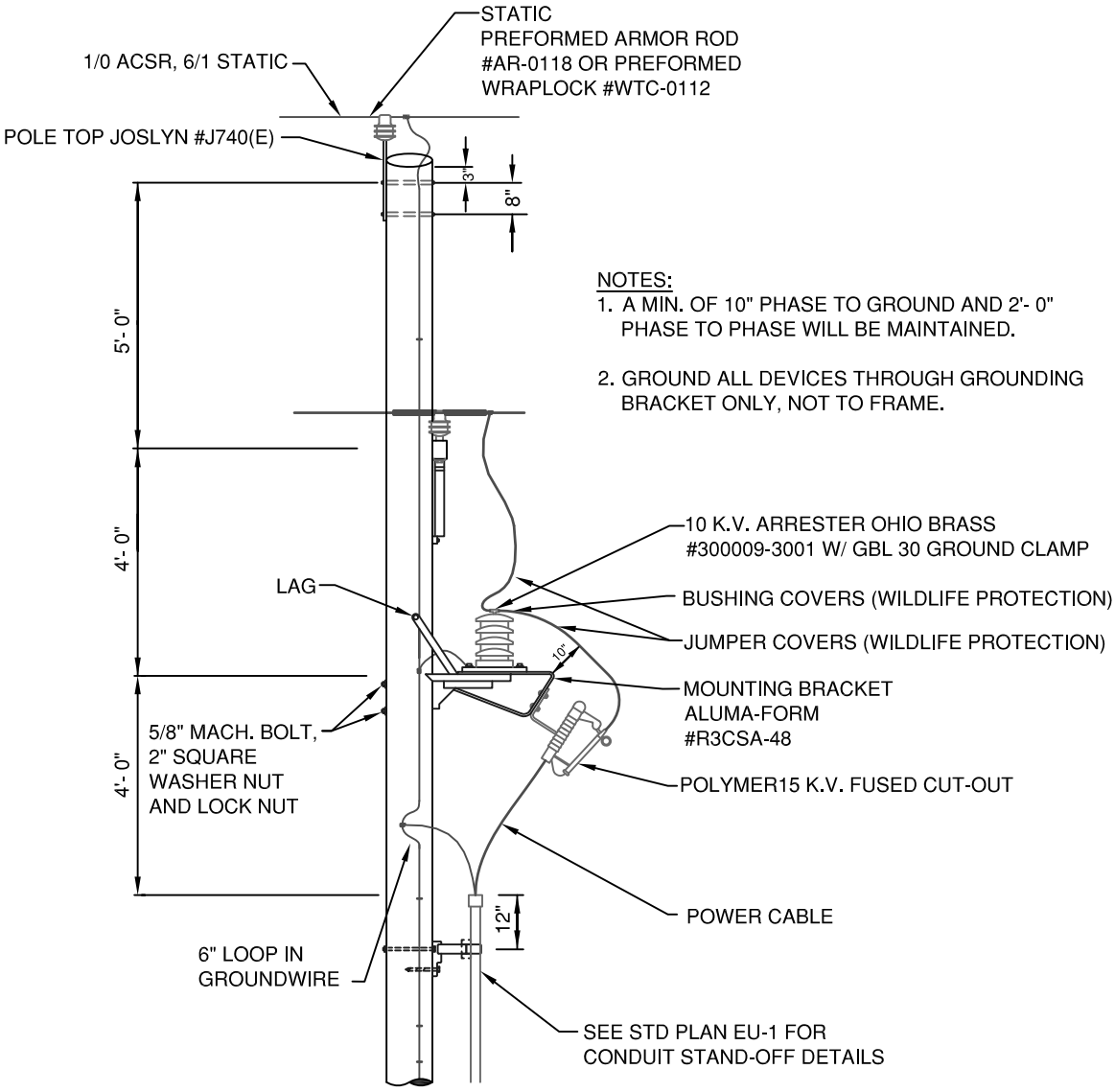

NOTES:
1. A MIN. OF 10" PHASE TO GROUND AND 2'- 0" PHASE TO PHASE WILL BE MAINTAINED.
2. GROUND ALL DEVICES THROUGH GROUNDING BRACKET ONLY, NOT TO FRAME.

NOTES:
1. USE CAD-WELD FOR GROUND ROD CONNECTION.
2. 2-10' GROUNDING ROD SECTIONAL #K9160 GROUNDING ROD THREADED COUPLING #CR58.

NOTE:
ALL MATERIALS SHALL BE AS LISTED, OR AN APPROVED EQUAL. THE USE OF A BRAND NAME IS FOR THE PURPOSE OF DESCRIBING A STANDARD QUALITY, PERFORMANCE, AND CHARACTERISTIC DESIRED, AND IS NOT INTENDED TO LIMIT OR RESTRICT COMPETITION.

REVISED: 12/27/2011

CITY OF GRAND ISLAND UTILITIES DEPARTMENT	DATE : 12/7/11 DRAWN BY : K.J.M. CHECKED BY : T.W.B.	3Ø SWITCH U.G. DISCONNECT	PLAN EO - 7A

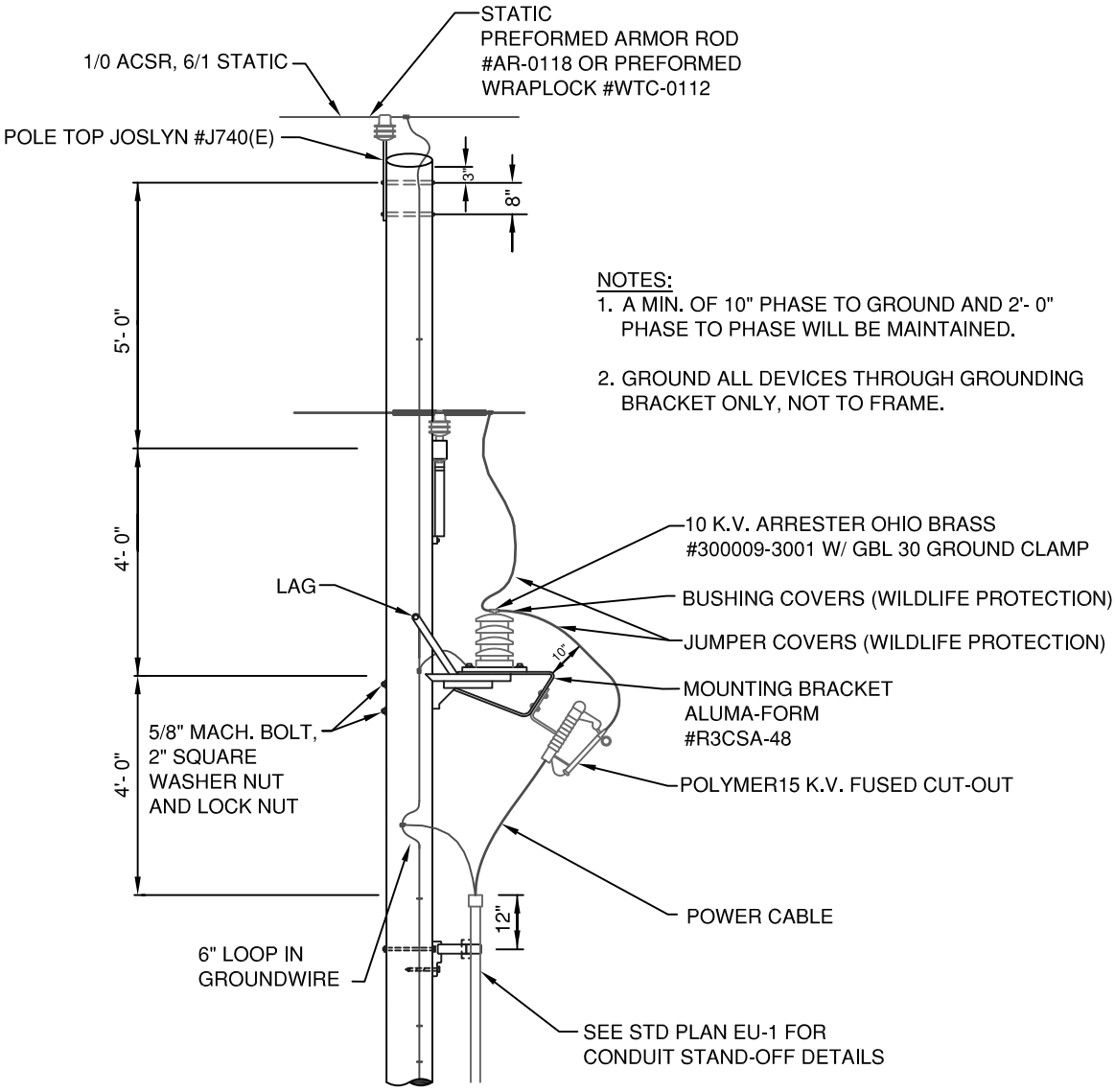

NOTES:
1. A MIN. OF 10" PHASE TO GROUND AND 2'- 0" PHASE TO PHASE WILL BE MAINTAINED.
2. GROUND ALL DEVICES THROUGH GROUNDING BRACKET ONLY, NOT TO FRAME.

NOTES:
1. USE CAD-WELD FOR GROUND ROD CONNECTION.
2. 2-10' GROUNDING ROD SECTIONAL #K9160 GROUNDING ROD THREADED COUPLING #CR58.

NOTE:
ALL MATERIALS SHALL BE AS LISTED, OR AN APPROVED EQUAL. THE USE OF A BRAND NAME IS FOR THE PURPOSE OF DESCRIBING A STANDARD QUALITY, PERFORMANCE, AND CHARACTERISTIC DESIRED, AND IS NOT INTENDED TO LIMIT OR RESTRICT COMPETITION.

REVISED: 12/27/2011

CITY OF GRAND ISLAND UTILITIES DEPARTMENT	DATE : 12/7/11 DRAWN BY : K.J.M. CHECKED BY : T.W.B.	3Ø SWITCH U.G. DISCONNECT	PLAN EO - 7A

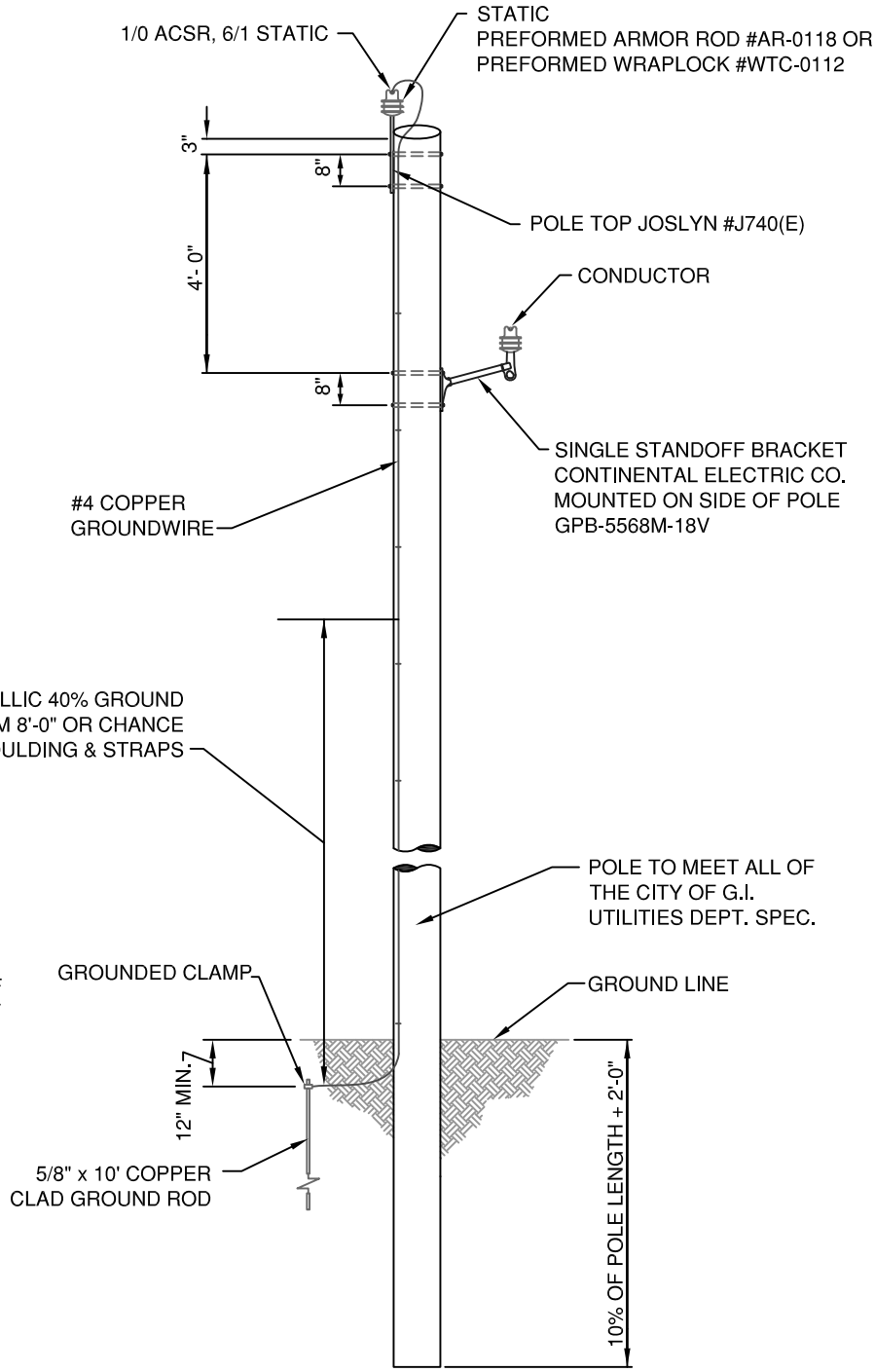

NOTE:

1. POLE SETTING - ALL POLES SHALL BE TAMPED TO THE APPROVAL OF THE INSPECTOR FOR THE CITY OF GRAND ISLAND UTILITIES DEPT.
2. STAPLE SPACING: TYPICAL 12" SPACING- EXCEPT TOP 8' AND BOTTOM 8' TO BE 6" SPACING.

NOTE:
ALL MATERIALS SHALL BE AS LISTED, OR AN APPROVED EQUAL. THE USE OF A BRAND NAME IS FOR THE PURPOSE OF DESCRIBING A STANDARD QUALITY, PERFORMANCE, AND CHARACTERISTIC DESIRED, AND IS NOT INTENDED TO LIMIT OR RESTRICT COMPETITION.

REVISED: 12/27/2011

CITY OF GRAND ISLAND UTILITIES DEPARTMENT	DATE : 5/10/96 DRAWN BY : P.S.L. CHECKED BY : T.W.B.	1 Ø STRUCTURE (1PS)	PLAN EO- 8

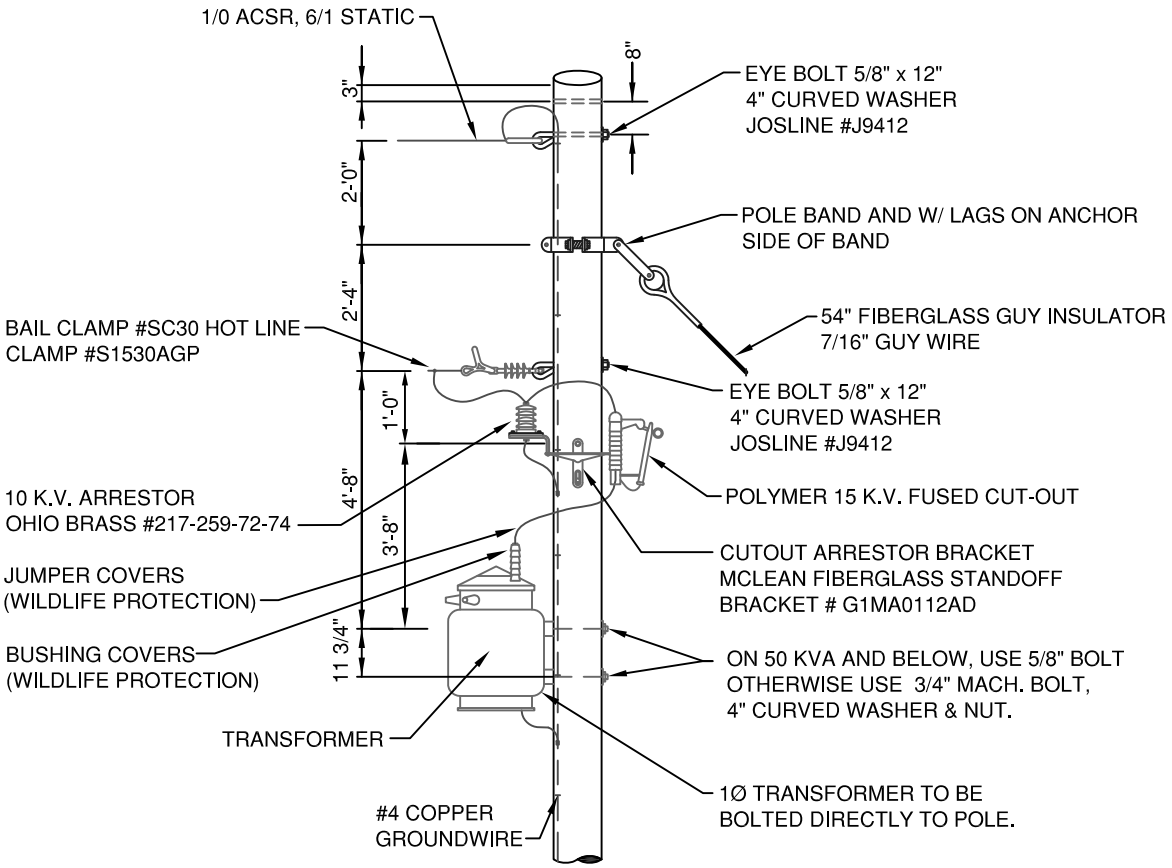

NOTE:

1. POLE SETTING - ALL POLES SHALL BE TAMPED TO THE APPROVAL OF THE INSPECTOR FOR THE CITY OF GRAND ISLAND UTILITIES DEPT.
2. GROUNDING CLAMP
3. 5/8" X 10' GROUNDING ROD.
4. STAPLE SPACING: TYPICAL 12" SPACING- EXCEPT TOP 8' AND BOTTOM 8' TO BE 6" SPACING.

NOTE:
ALL MATERIALS SHALL BE AS LISTED, OR AN APPROVED EQUAL. THE USE OF A BRAND NAME IS FOR THE PURPOSE OF DESCRIBING A STANDARD QUALITY, PERFORMANCE, AND CHARACTERISTIC DESIRED, AND IS NOT INTENDED TO LIMIT OR RESTRICT COMPETITION.

REVISED: 12/27/2011

CITY OF GRAND ISLAND UTILITIES DEPARTMENT	DATE : 5/10/96 DRAWN BY : P.S.L. CHECKED BY : T.W.B.	1 Ø DEAD-END (1PDD)	PLAN EO - 9

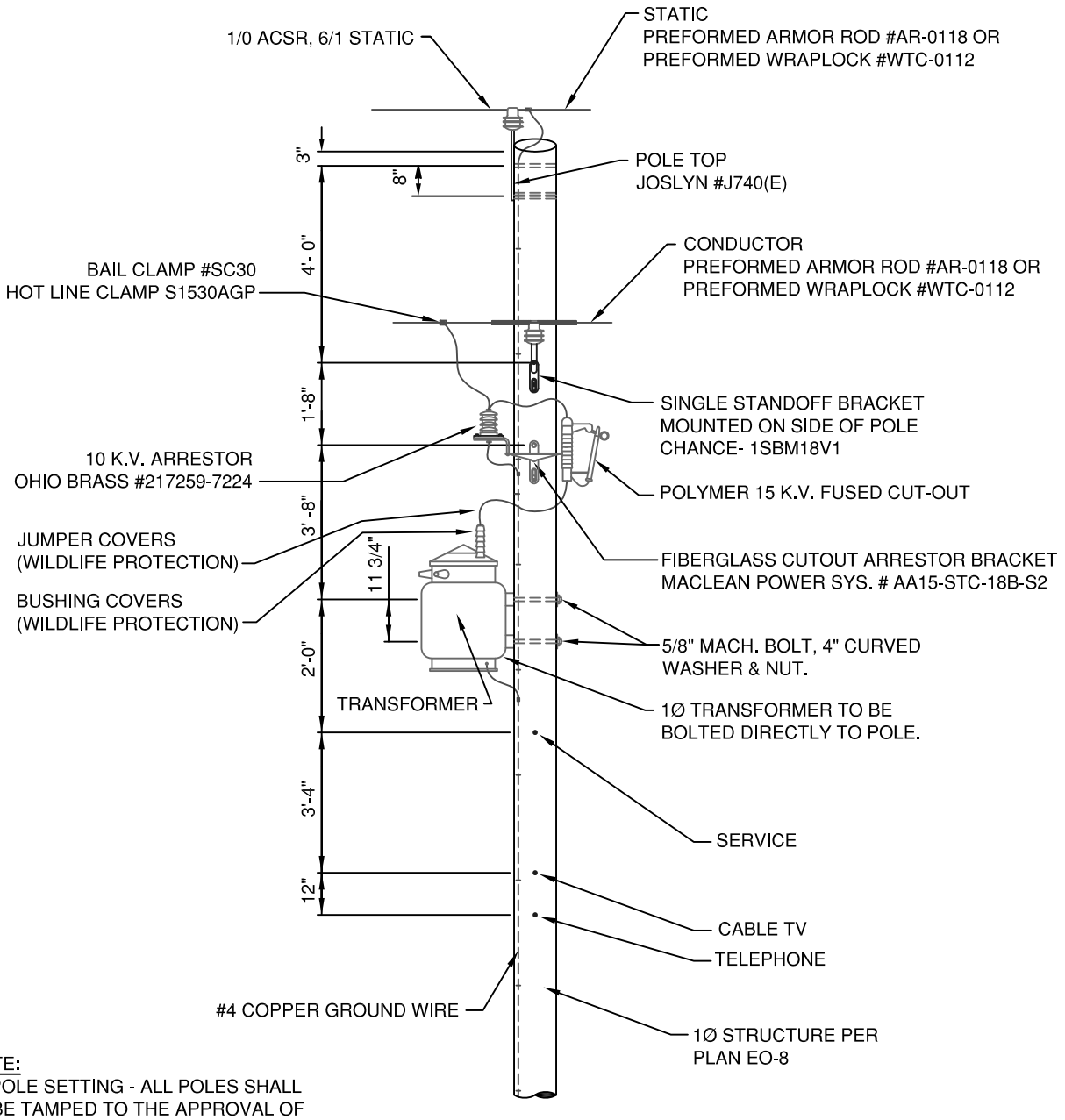

NOTE:

1. POLE SETTING - ALL POLES SHALL BE TAMPED TO THE APPROVAL OF THE INSPECTOR FOR THE CITY OF GRAND ISLAND UTILITIES DEPT.
2. GROUNDING CLAMP
3. 5/8" X 10' GROUNDING ROD.
4. STAPLE SPACING: TYPICAL 12" SPACING- EXCEPT TOP 8' AND BOTTOM 8' TO BE 6" SPACING.

NOTE:
ALL MATERIALS SHALL BE AS LISTED, OR AN APPROVED EQUAL. THE USE OF A BRAND NAME IS FOR THE PURPOSE OF DESCRIBING A STANDARD QUALITY, PERFORMANCE, AND CHARACTERISTIC DESIRED, AND IS NOT INTENDED TO LIMIT OR RESTRICT COMPETITION.

REVISED: 12/27/2011

CITY OF GRAND ISLAND UTILITIES DEPARTMENT	DATE : 5/10/96 DRAWN BY : P.S.L. CHECKED BY : T.W.B.	1Ø XFMR MOUNTING ON 1Ø 40' & 45' POLES (1PTM / 1PS)	PLAN EO-10

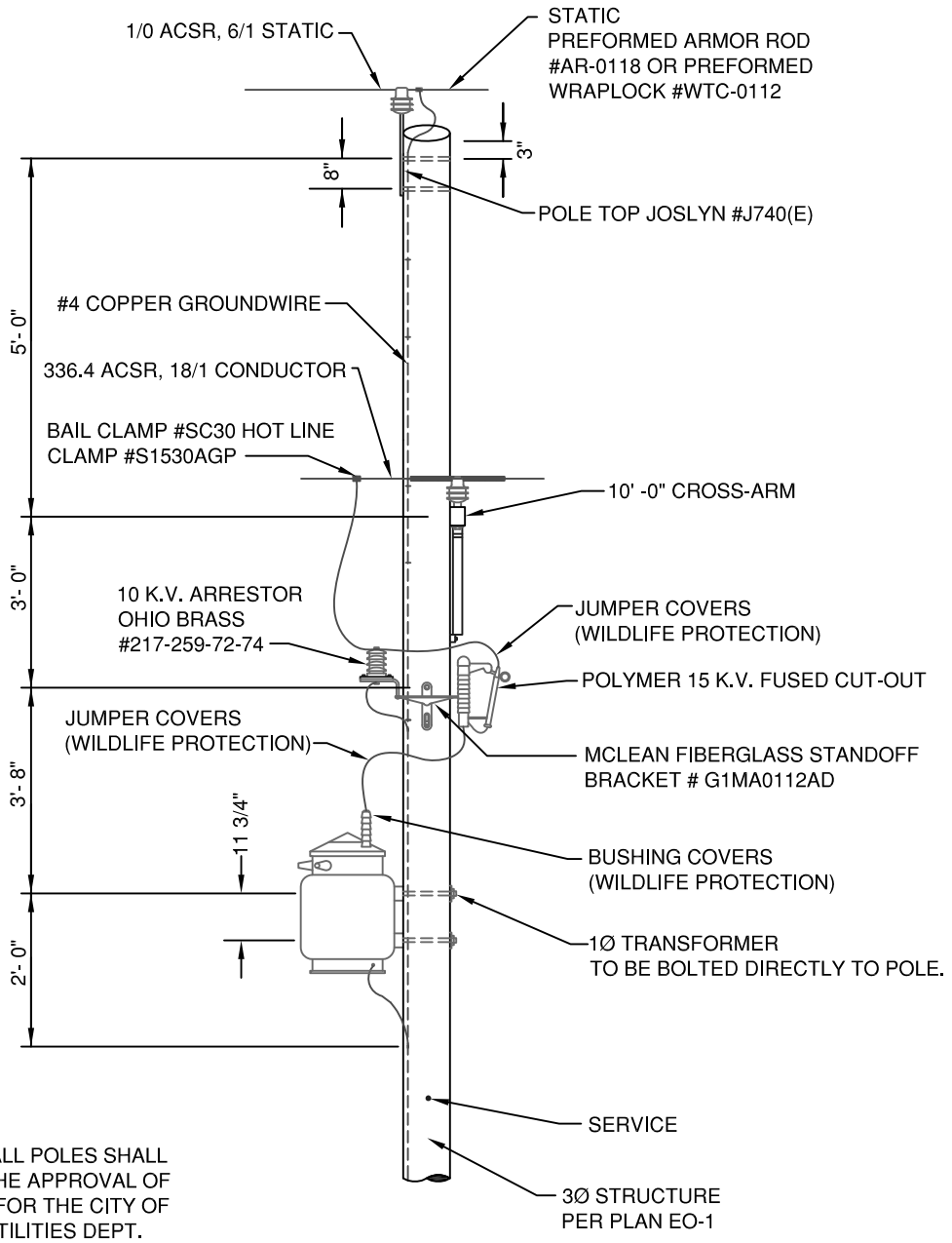

NOTE:

1. POLE SETTING - ALL POLES SHALL BE TAMPED TO THE APPROVAL OF THE INSPECTOR FOR THE CITY OF GRAND ISLAND UTILITIES DEPT.
2. GROUNDING CLAMP
3. 5/8" X 10' GROUNDING ROD.
4. STAPLE SPACING: TYPICAL 12" SPACING- EXCEPT TOP 8' AND BOTTOM 8' TO BE 6" SPACING.

NOTE:
ALL MATERIALS SHALL BE AS LISTED, OR AN APPROVED EQUAL. THE USE OF A BRAND NAME IS FOR THE PURPOSE OF DESCRIBING A STANDARD QUALITY, PERFORMANCE, AND CHARACTERISTIC DESIRED, AND IS NOT INTENDED TO LIMIT OR RESTRICT COMPETITION.

REVISIONS: 12/27/2011

CITY OF GRAND ISLAND UTILITIES DEPARTMENT	DATE : 1/10/08 DRAWN BY : K.J.M. CHECKED BY : T.W.B.	1Ø XFMR MOUNTING ON 3Ø STRUCTURE (1PTM / TS)	PLAN EO - 10A

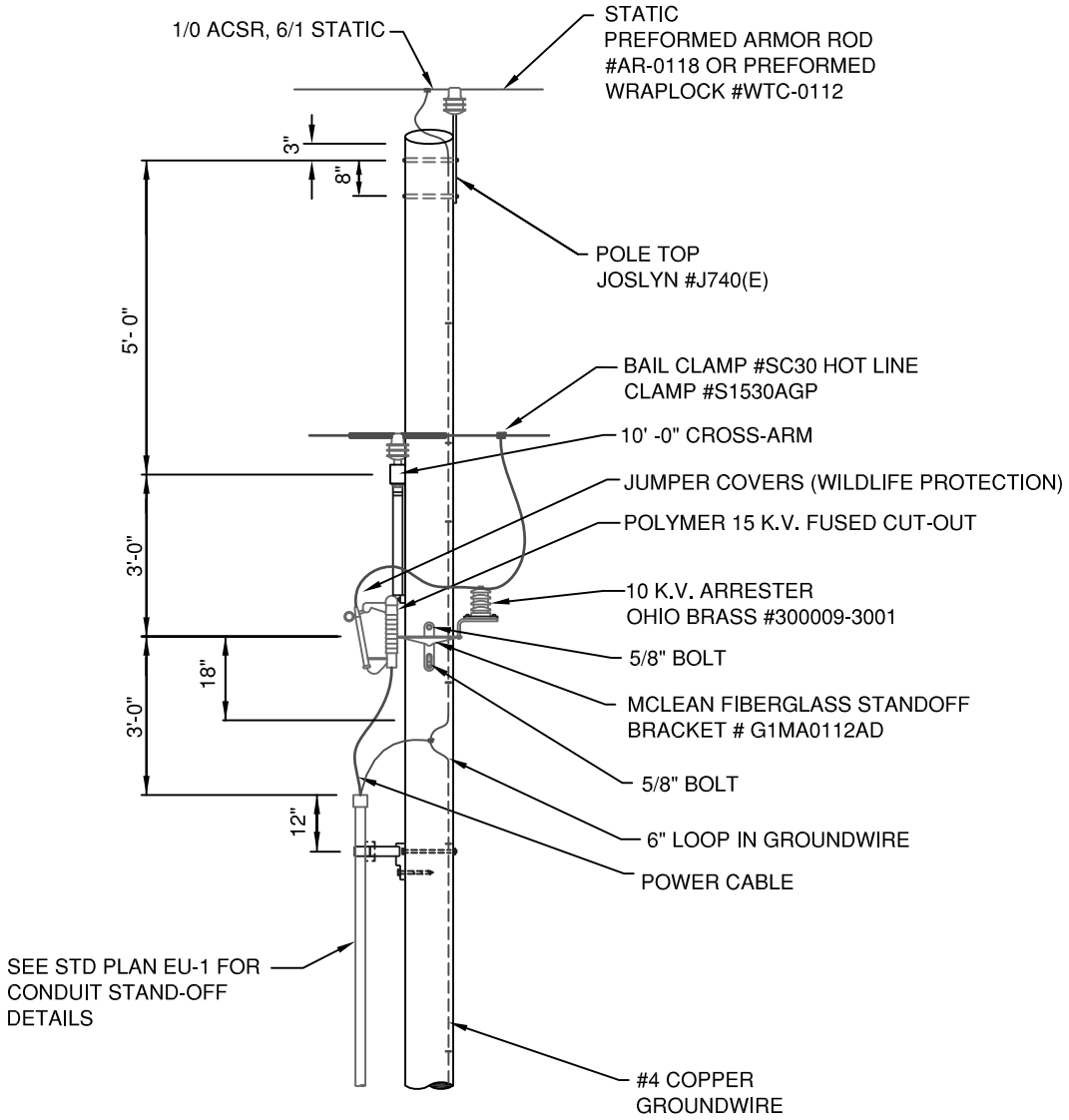

NOTE:

1. GROUND ALL DEVICES THROUGH GROUNDING BRACKET ONLY NOT TO FRAME
2. GROUND CLAMP
3. 1-10' GROUNDING ROD SECTIONAL
4. #K9160GROUNDING ROD TREADED COUPLING CR58
5. SEE STANDARD PLAN EO-08 GROUNDING LAYOUT

NOTE:
ALL MATERIALS SHALL BE AS LISTED, OR AN APPROVED EQUAL. THE USE OF A BRAND NAME IS FOR THE PURPOSE OF DESCRIBING A STANDARD QUALITY, PERFORMANCE, AND CHARACTERISTIC DESIRED, AND IS NOT INTENDED TO LIMIT OR RESTRICT COMPETITION.

REVISED: 12/27/2011

CITY OF GRAND ISLAND UTILITIES DEPARTMENT	DATE : 4/12/96 DRAWN BY : P.S.L. CHECKED BY : T.W.B.	1Ø DISCONNECT RISER STRUCTURE (F.U.G.)	PLAN EO-11

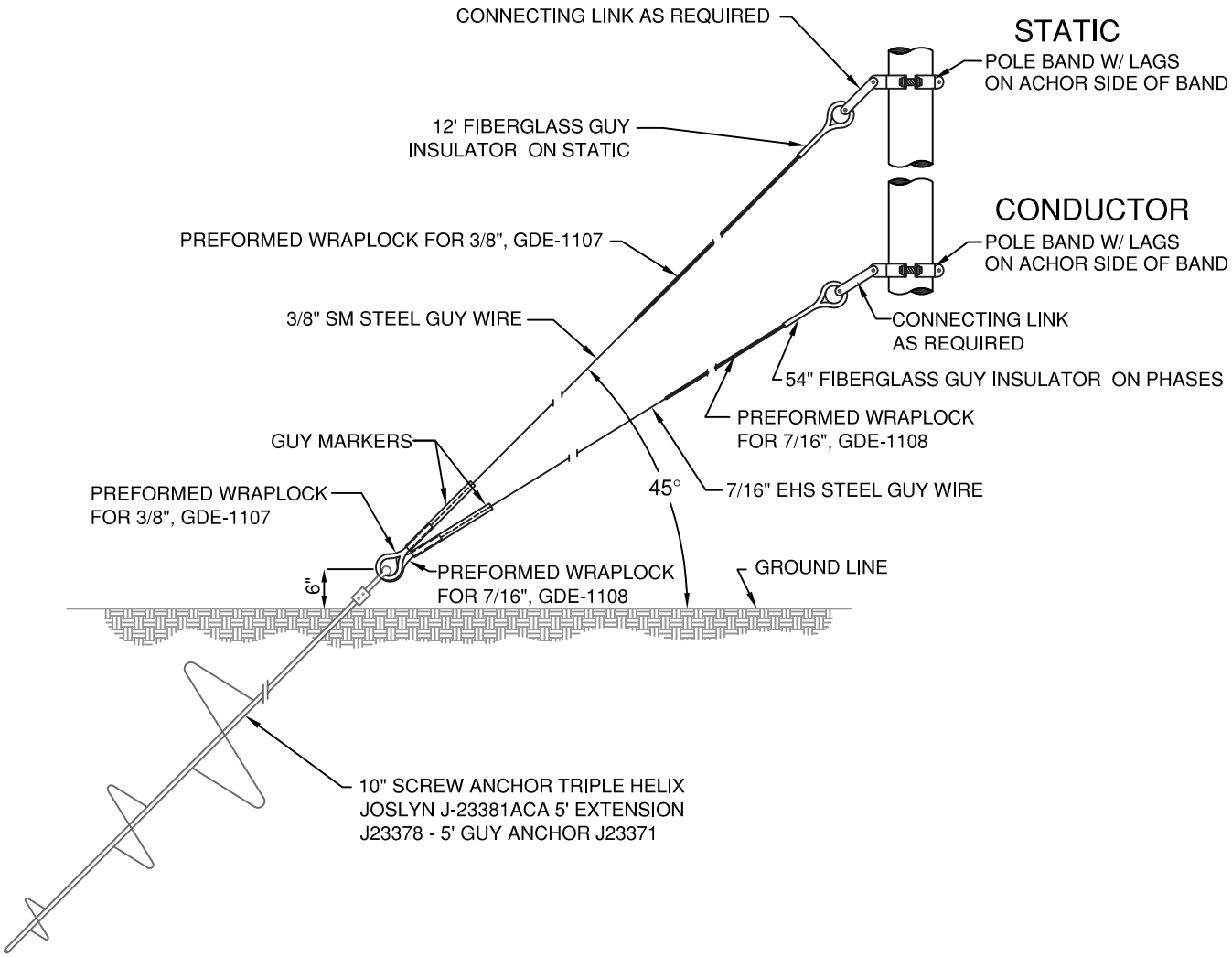

NOTE:
ALL MATERIALS SHALL BE AS LISTED, OR AN APPROVED EQUAL. THE USE OF A BRAND NAME IS FOR THE PURPOSE OF DESCRIBING A STANDARD QUALITY, PERFORMANCE, AND CHARACTERISTIC DESIRED, AND IS NOT INTENDED TO LIMIT OR RESTRICT COMPETITION.

REVISED: 12/27/2011

CITY OF GRAND ISLAND UTILITIES DEPARTMENT	DATE : 4/12/96 DRAWN BY : P.S.L. CHECKED BY : T.W.B.	ANCHOR ASSEMBLY (AA)	PLAN EO-12

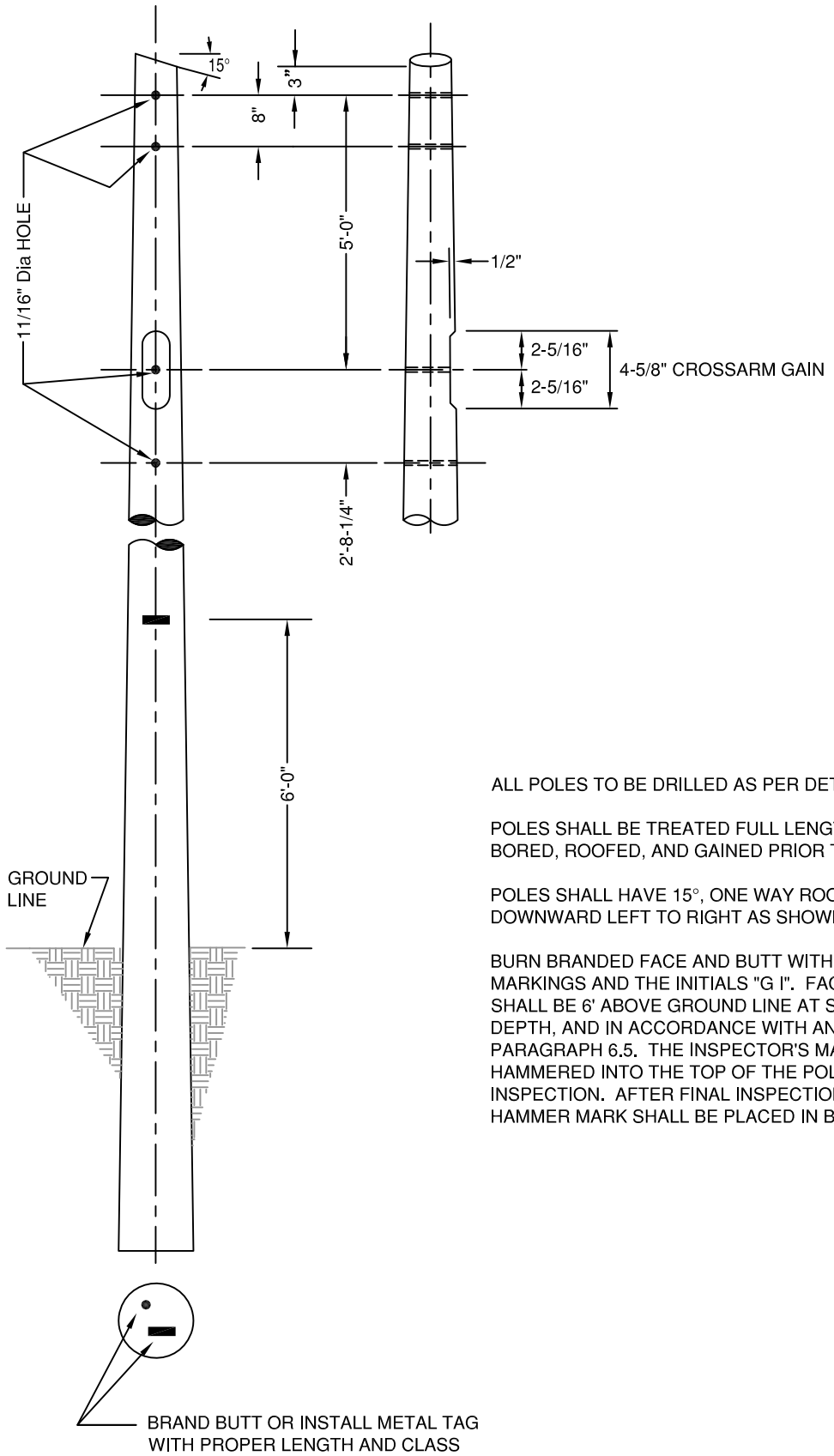

ALL POLES TO BE DRILLED AS PER DETAILS.

POLES SHALL BE TREATED FULL LENGTH, AND SHALL BE BORED, ROOFED, AND GAINED PRIOR TO TREATMENT.

POLES SHALL HAVE 15°, ONE WAY ROOF, SLOPED DOWNWARD LEFT TO RIGHT AS SHOWN IN DETAIL.

BURN BRANDED FACE AND BUTT WITH STANDARD MARKINGS AND THE INITIALS "G I". FACE MARK LOCATION SHALL BE 6' ABOVE GROUND LINE AT STANDARD SETTING DEPTH, AND IN ACCORDANCE WITH ANSI 05.1 (1972), PARAGRAPH 6.5. THE INSPECTOR'S MARK SHALL BE HAMMERED INTO THE TOP OF THE POLE AFTER INITIAL INSPECTION. AFTER FINAL INSPECTION, THE INSPECTOR'S HAMMER MARK SHALL BE PLACED IN BUTT OF POLE.

REVISED: 11/14/11

CITY OF GRAND ISLAND UTILITIES DEPARTMENT	DATE : 8/24/94 DRAWN BY : K.W.S. CHECKED BY : T.W.B.	WOOD DISTRIBUTION POLE- 40' & LARGER	PLAN EO-13

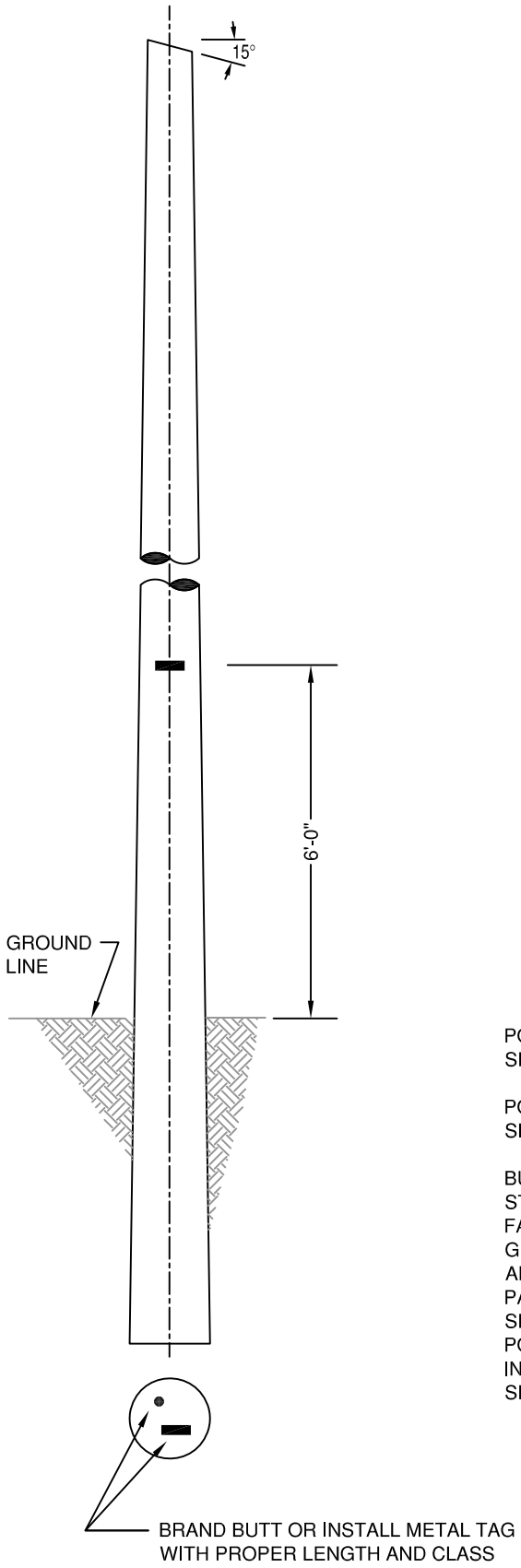

POLES SHALL BE TREATED FULL LENGTH, AND SHALL BE ROOFED PRIOR TO TREATMENT.

POLES SHALL HAVE 15°, ONE WAY ROOF, SLOPED DOWNWARD LEFT TO RIGHT.

BURN BRANDED FACE AND BUTT WITH STANDARD MARKINGS AND THE INITIALS "G I". FACE MARK LOCATION SHALL BE 6' ABOVE GROUND LINE AT STANDARD SETTING DEPTH, AND IN ACCORDANCE WITH ANSI 05.1 (1972), PARAGRAPH 6.5. THE INSPECTOR'S MARK SHALL BE HAMMERED INTO THE TOP OF THE POLE AFTER INITIAL INSPECTION. AFTER FINAL INSPECTION, THE INSPECTOR'S HAMMER MARK SHALL BE PLACED IN BUTT OF POLE.

REVISED: 9/1/2011

CITY OF GRAND ISLAND UTILITIES DEPARTMENT	DATE: 8/20/91 DRAWN BY: K.W.S. CHECKED BY: T.W.B.	WOOD SERVICE & GUY POLE- 30' & 35'	PLAN EO-14

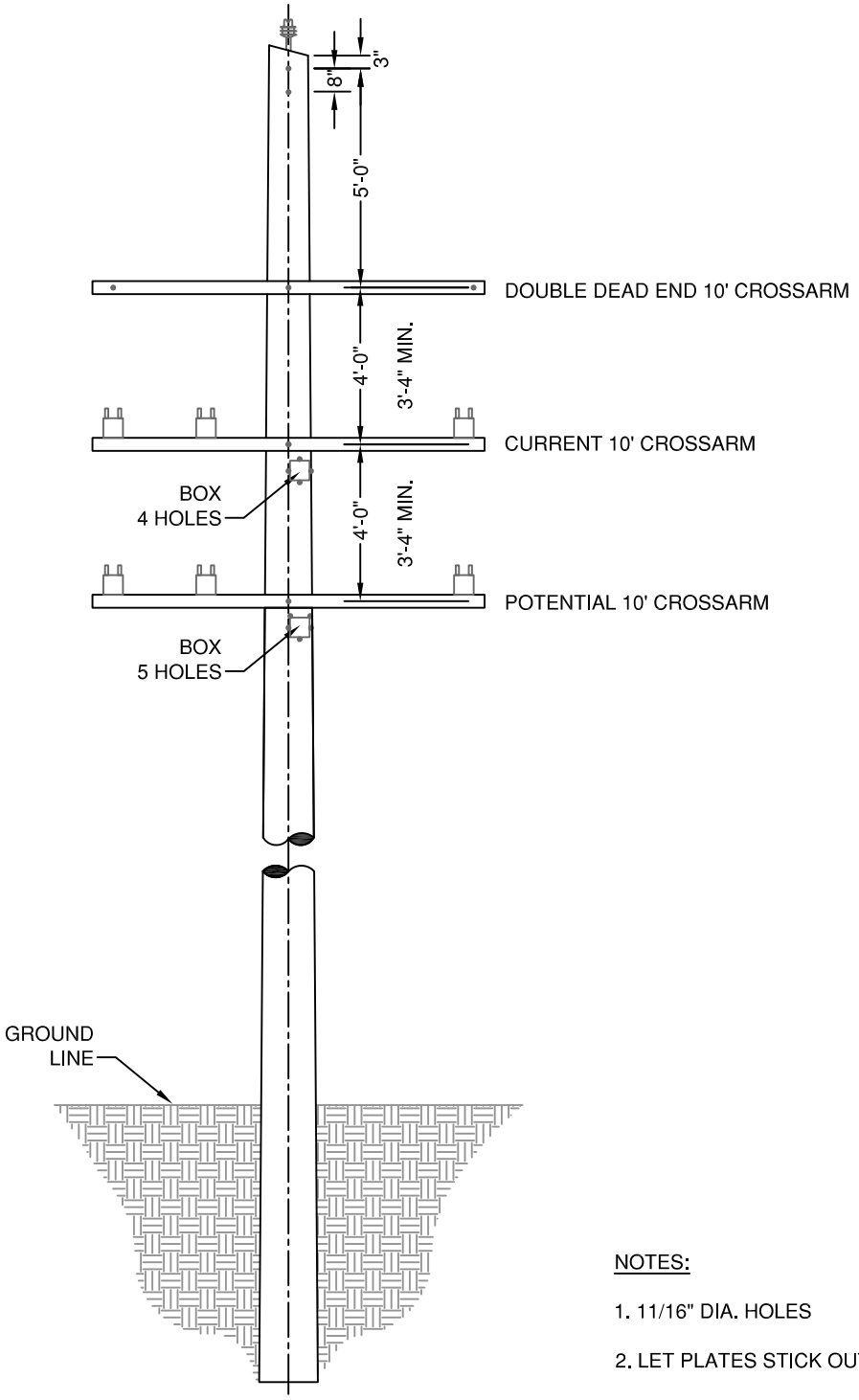

NOTES:

1. 11/16" DIA. HOLES
2. LET PLATES STICK OUT SIDE
3. WHITE DOT TO LINE - CUTOUT TOP, BOTTOM TO P.T.'S

CITY OF GRAND ISLAND UTILITIES DEPARTMENT	DATE: 1/26/98 DRAWN BY: TDZ CHECKED BY: TWB	HOLE PATTERN POLE WITH D.D.E., C.T.'S, AND P.T.'S	PLAN EO-15

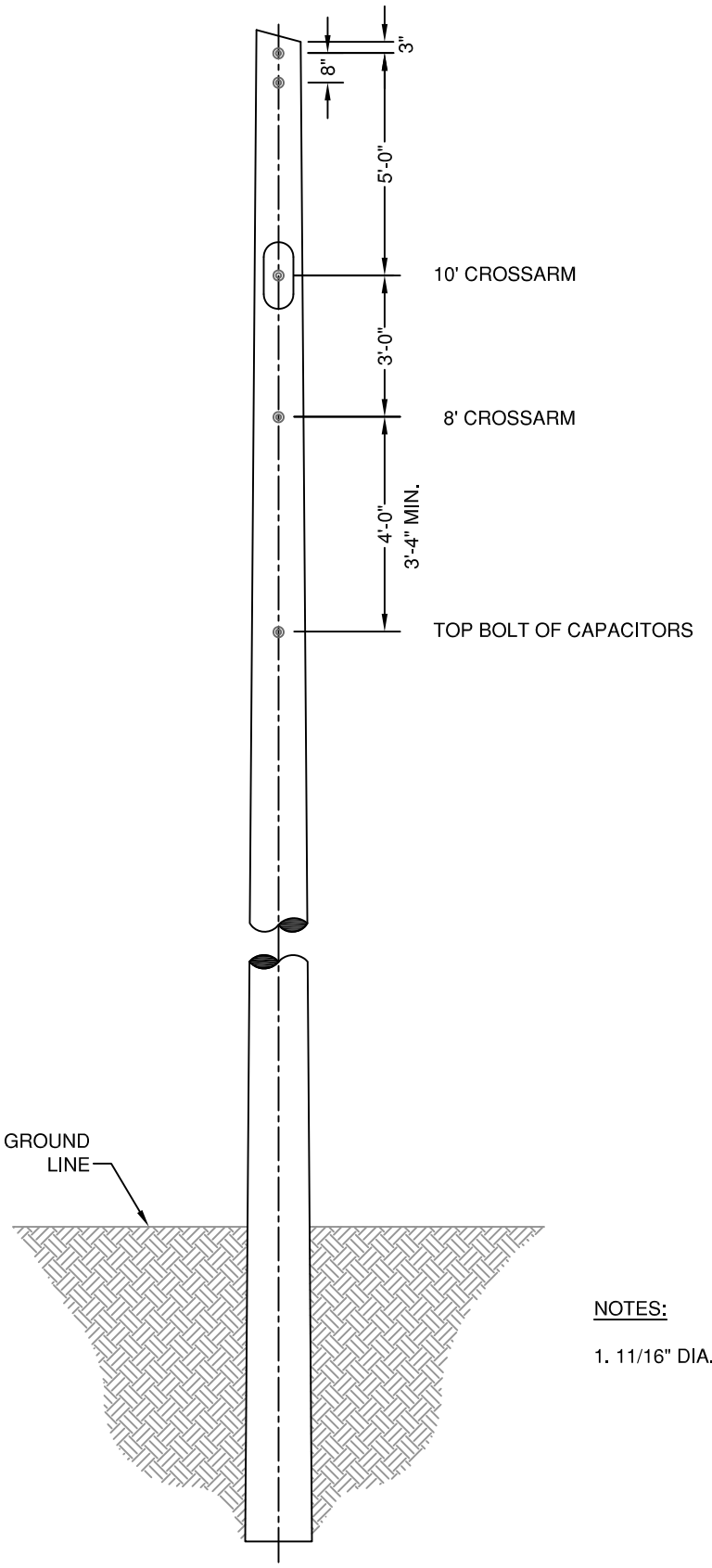

NOTES:

1. 11/16" DIA. HOLES

REVISED 1/12/2012

CITY OF GRAND ISLAND UTILITIES DEPARTMENT	DATE: 1/27/98 DRAWN BY: TDZ CHECKED BY: TWB	HOLE PATTERN FOR POLE WITH CAPACITORS	PLAN EO-16

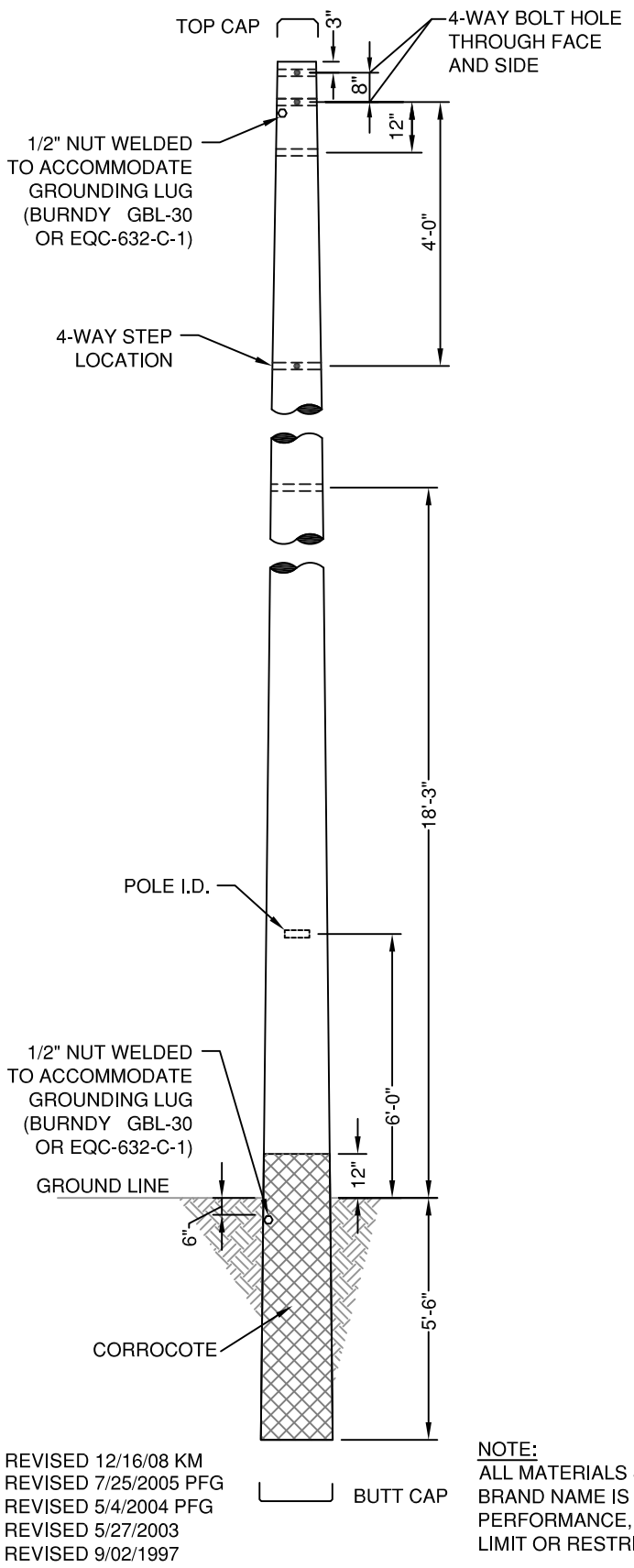

NOTES

1. ALL HOLES TO BE 11/16" DIA UNLESS OTHERWISE NOTED.
2. 1-1/8" HOLES FOR REMOVABLE STEPS SHALL BE PROVIDED FOR CLIMBING ONE LONGITUDINAL POLE FACE. STEPS SHALL EXTEND FROM 1'-6" ABOVE GROUND LINE TO APPROX. 4'0" FROM TOP OF POLE. VERTICAL SPACING SHALL BE 1'-6" AND HORIZONTAL OFFSET SHALL BE COMFORTABLE FOR CLIMBING. HOLES TO ACCOMODATE SPEED SYSTEMS STEPS- CATALOG #SPS-1.
3. ALL DRILLING IS TO BE CAPPED AND PLUGGED W/ GRAY PLUGS.
4. PROVIDE SIX GREENLEE UNITBITS- CATALOG #36414.
5. TOP CAP AND BUTT CAP SHALL BE INSTALLED BEFORE DELIVERY.
6. POLE I.D. TAG SHALL BE STAMPED "GIUD" AND INCLUDE POLE LENGTH, CLASS, MANUFACTURER, AND DATE. TAG SHALL BE INSTALLED BEFORE DELIVERY.
7. POLES SHALL BE SINGLE PIECE, TAPERED, TUBULAR STEEL MEETING A.S.T.M. A570 GR65 SPECIFICATIONS, FULL COAT HOT-DIP GALVANIZED AFTER FABRICATION, AND SHALL BE DESIGNED TO MEET A LOAD CAPACITY EQUIVALENT TO CLASS 2 WOOD POLES BASED ON N.E.S.C. GRADE "B" REQUIREMENTS.

LIST OF USERS:

_____

_____

_____

_____

REVISED 12/16/08 KM
REVISED 7/25/2005 PFG
REVISED 5/4/2004 PFG
REVISED 5/27/2003
REVISED 9/02/1997

NOTE:
ALL MATERIALS SHALL BE AS LISTED, OR AN APPROVED EQUAL. THE USE OF A BRAND NAME IS FOR THE PURPOSE OF DESCRIBING A STANDARD QUALITY, PERFORMANCE, AND CHARACTERISTIC DESIRED, AND IS NOT INTENDED TO LIMIT OR RESTRICT COMPETITION.

CITY OF GRAND ISLAND UTILITIES DEPARTMENT	DATE: 6/30/97 DRAWN BY: P.S.L. CHECKED BY: T.W.B.	DRILLING FOR ONE PIECE 35' STEEL POLE	PLAN EO-17

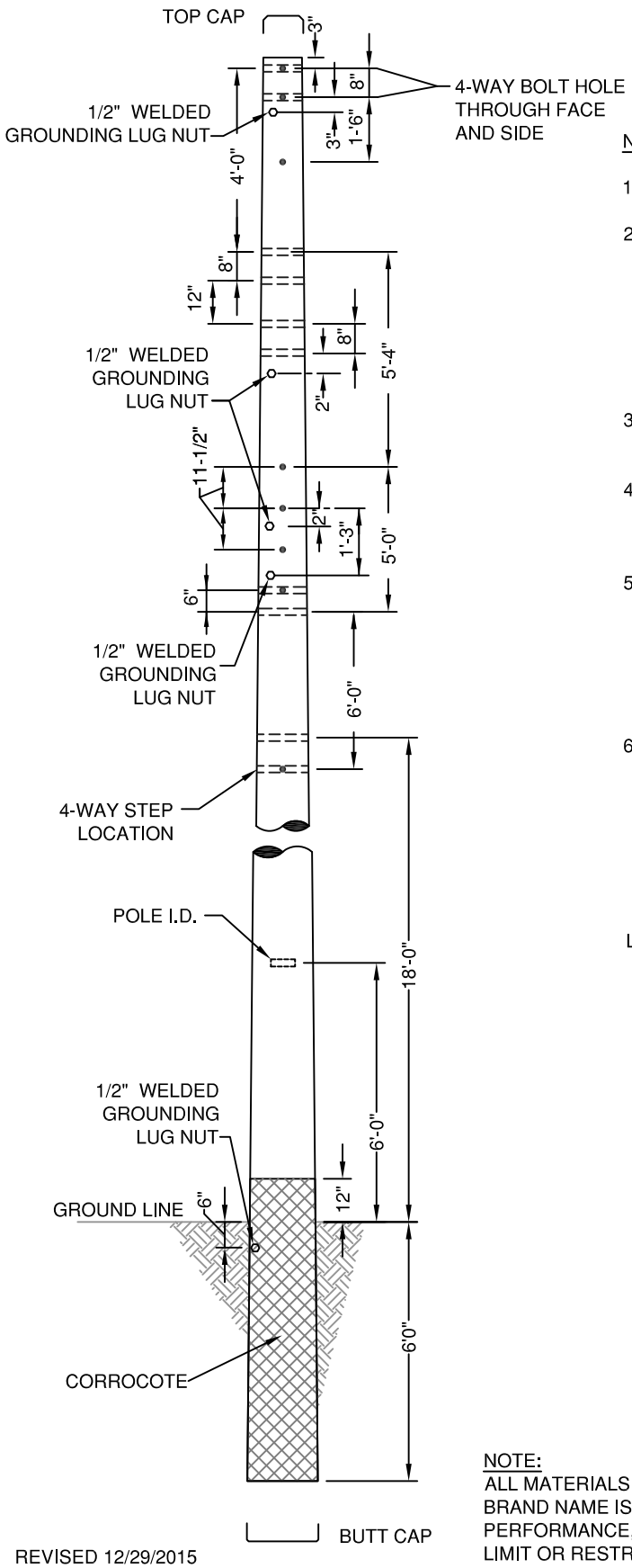

REVISED 12/29/2015

NOTES

1. ALL HOLES TO BE 11/16" DIA UNLESS OTHERWISE NOTED.
2. STEP SHALL BE PROVIDED FOR CLIMBING ONE LONGITUDINAL POLE FACE. STEPS SHALL EXTEND FROM 1'-6" ABOVE GROUND LINE TO APPROX. 4'0" FROM TOP OF POLE. VERTICAL SPACING SHALL BE 1'-6" AND HORIZONTAL OFFSET SHALL BE COMFORTABLE FOR CLIMBING. HOLES TO ACCOMODATE SPEED SYSTEMS STEPS- CATALOG #SPS-1.
3. TOP CAP AND BUTT CAP SHALL BE INSTALLED BEFORE DELIVERY.
4. POLE I.D. TAG SHALL BE STAMPED "GIUD" AND INCLUDE POLE LENGTH, CLASS, MANUFACTURER, AND DATE. TAG SHALL BE INSTALLED BEFORE DELIVERY.
5. POLES SHALL BE SINGLE PIECE, TAPERED, TUBULAR STEEL MEETING A.S.T.M. A570 GR65 SPECIFICATIONS, FULL COAT HOT-DIP GALVANIZED AFTER FABRICATION, AND SHALL BE DESIGNED TO MEET A LOAD CAPACITY EQUIVALENT TO CLASS 2 WOOD POLES BASED ON N.E.S.C. GRADE "B" REQUIREMENTS.
6. ALL GROUNDING LUGS TO BE 1/2 " WELDED NUT (BURNDY GBL-30 OR EQC-632-C-1).

LIST OF USERS:

_____

_____

_____

_____

NOTE:
ALL MATERIALS SHALL BE AS LISTED, OR AN APPROVED EQUAL. THE USE OF A BRAND NAME IS FOR THE PURPOSE OF DESCRIBING A STANDARD QUALITY, PERFORMANCE, AND CHARACTERISTIC DESIRED, AND IS NOT INTENDED TO LIMIT OR RESTRICT COMPETITION.

CITY OF GRAND ISLAND UTILITIES DEPARTMENT	DATE : 5/4/2004 DRAWN BY : P.F.G. CHECKED BY : T.W.B.	DRILLING FOR ONE PIECE 40' STEEL POLE	PLAN EO-18

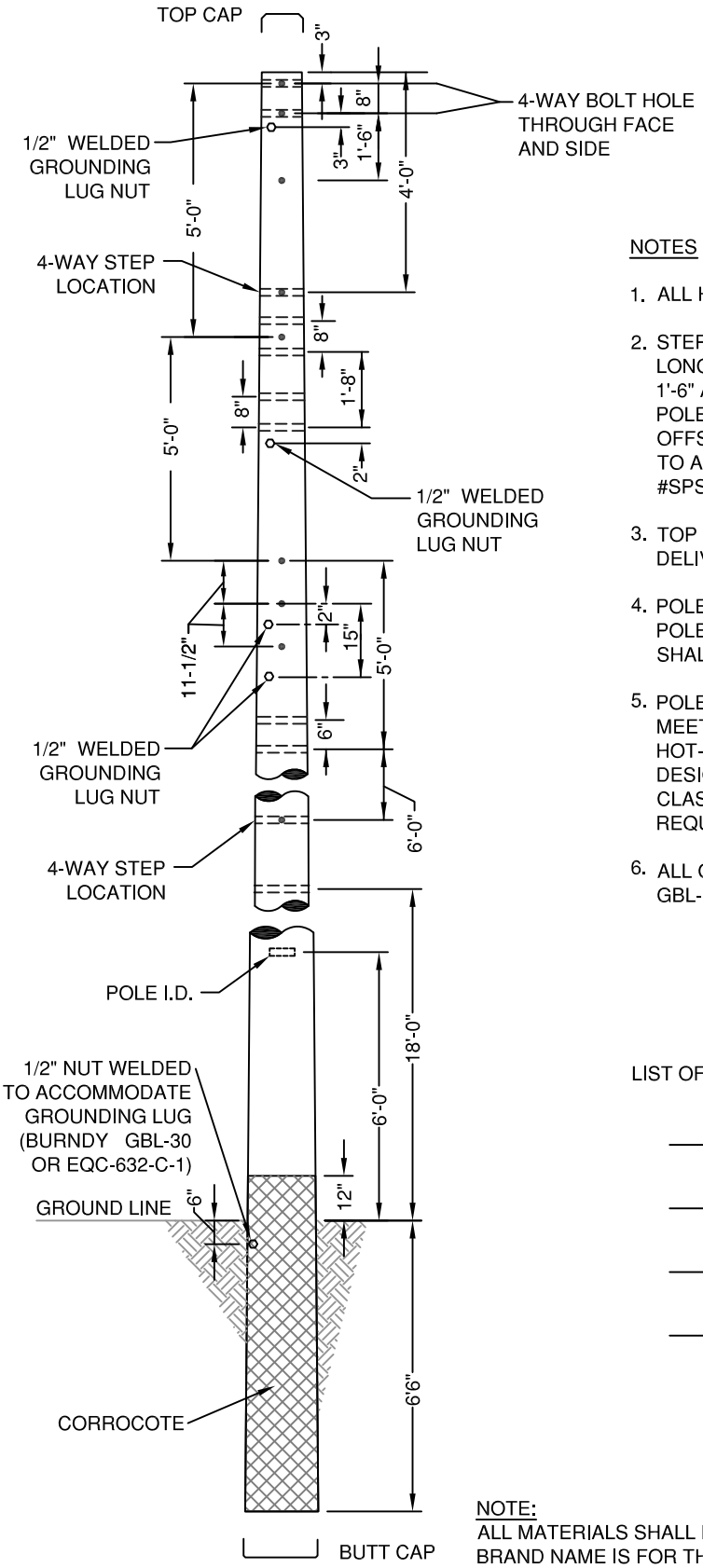

NOTES

1. ALL HOLES TO BE 11/16" DIA UNLESS OTHERWISE NOTED.
2. STEP HOLES SHALL BE PROVIDED FOR CLIMBING ONE LONGITUDINAL POLE FACE. STEPS SHALL EXTEND FROM 1'-6" ABOVE GROUND LINE TO APPROX. 4'0" FROM TOP OF POLE. VERTICAL SPACING SHALL BE 1'-6" AND HORIZONTAL OFFSET SHALL BE COMFORTABLE FOR CLIMBING. HOLES TO ACCOMODATE SPEED SYSTEMS STEPS- CATALOG #SPS-1.
3. TOP CAP AND BUTT CAP SHALL BE INSTALLED BEFORE DELIVERY.
4. POLE I.D. TAG SHALL BE STAMPED "GIUD" AND INCLUDE POLE LENGTH, CLASS, MANUFACTURER, AND DATE. TAG SHALL BE INSTALLED BEFORE DELIVERY.
5. POLES SHALL BE SINGLE PIECE, TAPERED, TUBULAR STEEL MEETING A.S.T.M. A570 GR65 SPECIFICATIONS, FULL COAT HOT-DIP GALVANIZED AFTER FABRICATION, AND SHALL BE DESIGNED TO MEET A LOAD CAPACITY EQUIVALENT TO CLASS 2 WOOD POLES BASED ON N.E.S.C. GRADE "B" REQUIREMENTS.
6. ALL GROUNDING LUGS TO BE 1/2 " WELDED NUT (BURNDY GBL-30 OR EQC-632-C-1).

LIST OF USERS:

_____

_____

_____

_____

NOTE:
ALL MATERIALS SHALL BE AS LISTED, OR AN APPROVED EQUAL. THE USE OF A BRAND NAME IS FOR THE PURPOSE OF DESCRIBING A STANDARD QUALITY, PERFORMANCE, AND CHARACTERISTIC DESIRED, AND IS NOT INTENDED TO LIMIT OR RESTRICT COMPETITION.

REVISED: 12/29/2015

CITY OF GRAND ISLAND UTILITIES DEPARTMENT	DATE : 2/01/2000 DRAWN BY : T.D.Z. CHECKED BY : T.W.B.	DRILLING FOR ONE PIECE 45' STEEL POLE	PLAN EO-19

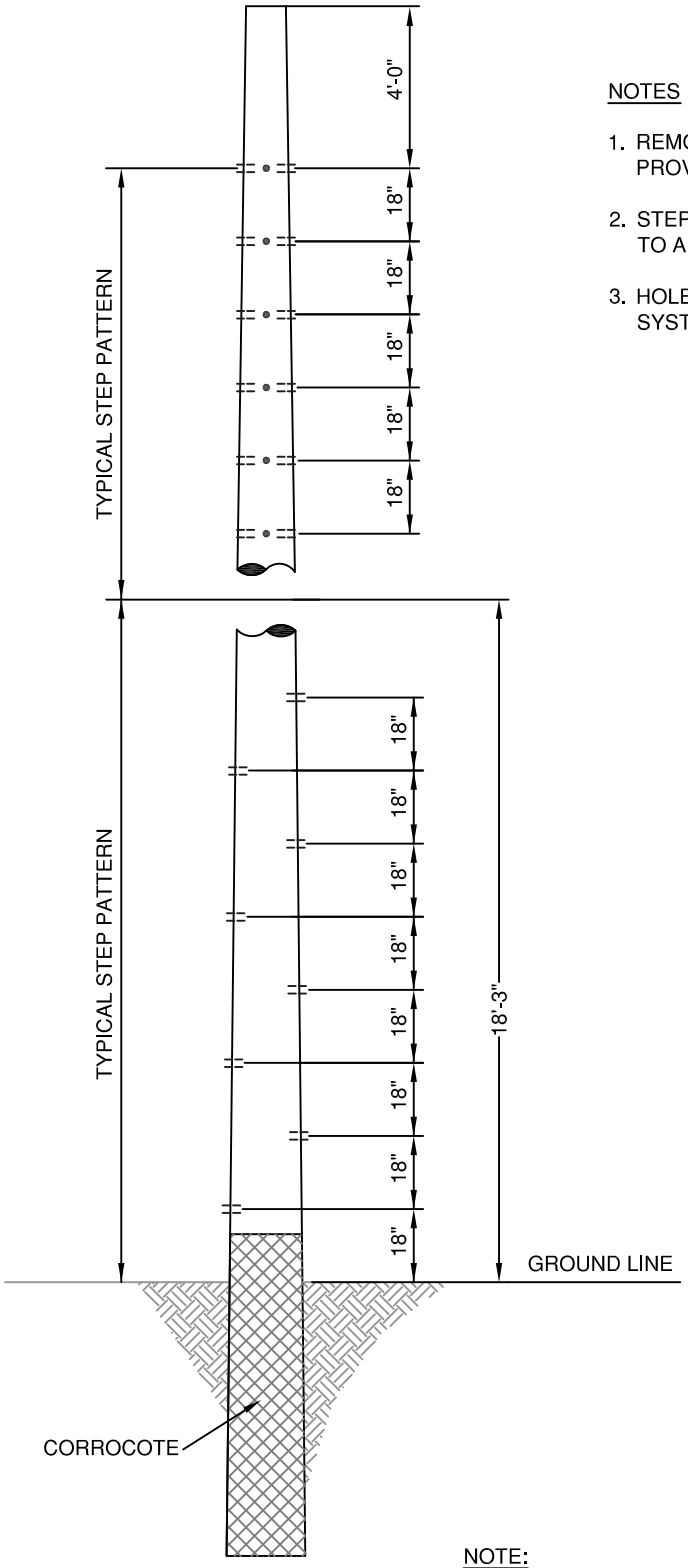

NOTES

1. REMOVEABLE STEPS WITH CLIP FASTENERS SHALL BE PROVIDED FOR CLIMING ONE LONGITUDINAL POLE FACE.
2. STEPS SHALL EXTEND FROM 1'-6" ABOVE GROUND LINE TO APROX. 4'-0" FROM TOP OF POLE.
3. HOLES SHALL BE DRILLED TO ACCOMODATE SPEED SYSTEM STEPS, CATALOG# SPS-1.

NOTE:
ALL MATERIALS SHALL BE AS LISTED, OR AN APPROVED EQUAL. THE USE OF A BRAND NAME IS FOR THE PURPOSE OF DESCRIBING A STANDARD QUALITY, PERFORMANCE, AND CHARACTERISTIC DESIRED, AND IS NOT INTENDED TO LIMIT OR RESTRICT COMPETITION.

CITY OF GRAND ISLAND UTILITIES DEPARTMENT	DATE: 12/19/08 DRAWN BY: K.J.M. CHECKED BY: T.W.B.	STEP INSERT LOCATIONS 35', 40', & 45' STEEL POLE	PLAN EO-19-S

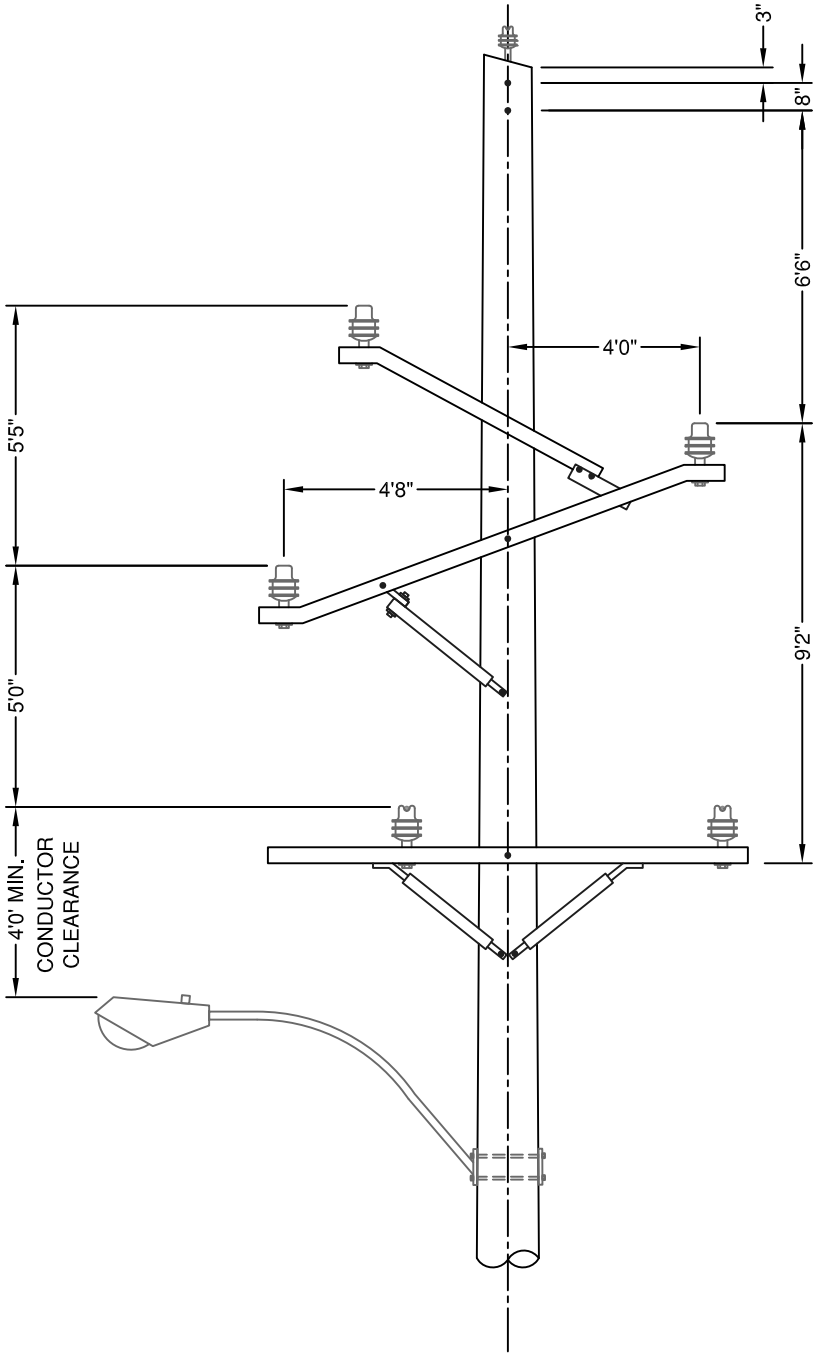

REVISED: 5/27/2003

CITY OF GRAND ISLAND UTILITIES DEPARTMENT	DATE: 10/7/98 DRAWN BY: TDZ CHECKED BY: TWB	34.5KV / 13.8KV POLE DETAIL	PLAN EO-20

SCHEDULE OF WIRING MATERIALS

ALL CONDUCTORS SHALL BE SINGLE CONDUCTOR, STRANDED COPPER U.L. LISTED, 600V. WITH SIZE OF CONDUCTOR AND TYPE AND COLOR OF INSULATION AS LISTED BELOW.

ONE PHASE CONDUCTOR MUST, AT THE TIME OF INSTALLATION, BE PERMANENTLY INDENTIFIED AS THE LINE 2 (RED) CONDUCTOR AT EACH END AND AT EVERY POINT WHERE THE CONDUCTOR IS ACCESSIBLE. IDENTIFICATION WILL BE ACCOMPLISHED BY:
(A) COLORING THE EXPOSED INSULATION RED
(B) MARKING THE EXPOSED INSULATION WITH RED TAPE.

SERVICE ENTRANCE: TYPE USE OR XHHW, NO. 6 AWG

EQUIPMENT GROUND: BARE OR INSULATED, NO. 6 AWG

POLE: NO. 12 AWG, THW OR THWN

BRANCH CIRCUIT FEEDERS, INCLUDING NEUTRALS: USE OR XHHW (IN CONDUIT) NO. 6 AWG

COLOR CODES: "INSULATED EQUIPMENT GROUND" - GREEN
"LINE 1" - BLACK
"LINE 2" - RED

FUSED DISCONNECT ENCLOSURE

FUSED DICONNECT SHALL HAVE A CAST ALUMINUM WEATHERPROOF CASE. DOOR SHALL BE HINGED, GASKETED AND SHALL HAVE PROVISION FOR A PADLOCK. PROVIDE WEATHERPROOF HUBS FOR ALL CONDUIT ENTRIES AND CABLE-GRIP BUSHINGS OF CORRECT SIZE FOR ALL CABLE ENTRIES.

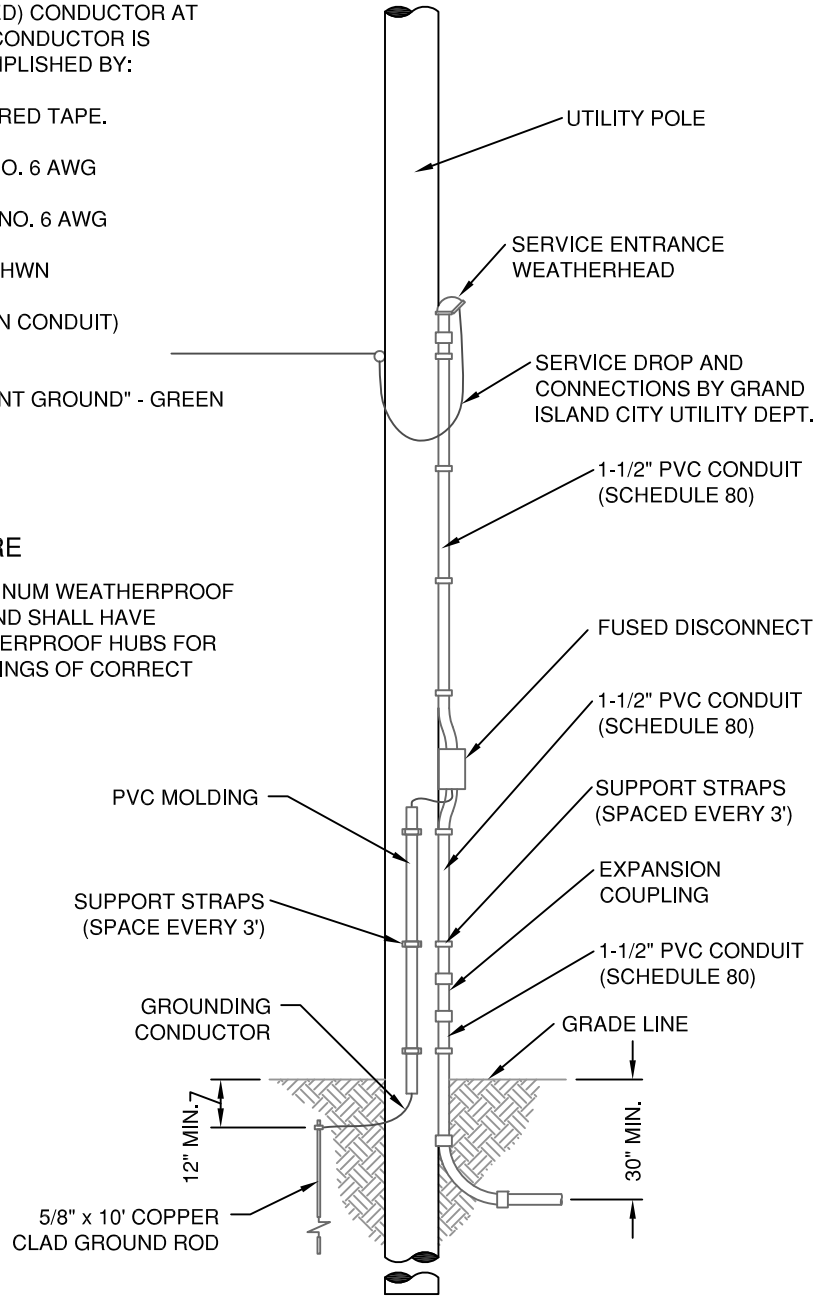

GENERAL NOTES

UNLESS INDICATED OTHERWISE, ALL COMPONENTS OF THE LIGHTING / POWER INSTALLATION ARE TO BE FURNISHED AND INSTALLED BY THE CONTRACTOR.

CONTRACT CITY UTILITY DEPARTMENT 72 HOURS PRIOR TO REQUIRING SERVICE CONNECTIONS.

ALL BOXES AND CABINETS WITH ACCESS TO ELECTRICAL COMPONENTS MUST BE PADLOCKED IMMEDIATELY AFTER INSTALLATION. CONTRACTOR SHALL PROVIDE PADLOCK DURING CONSTRUCTION PERIOD. AFTER FINAL ACCEPTANCE OF PROJECT, MAINTAINING UTILITY OR AGENCY WILL PROVIDE PADLOCK.

REVISED: 5/27/2003

CITY OF GRAND ISLAND UTILITIES DEPARTMENT	DATE : 2/16/98 DRAWN BY : T.D.Z. CHECKED BY : T.W.B.	LIGHTING CONTROL CENTER TYPE "D"	PLAN EO-21

SCHEDULE OF WIRING MATERIALS

ALL CONDUCTORS SHALL BE SINGLE CONDUCTOR, STRANDED COPPER U.L. LISTED, 600V. WITH SIZE OF CONDUCTOR AND TYPE AND COLOR OF INSULATION AS LISTED BELOW.

ONE PHASE CONDUCTOR MUST, AT THE TIME OF INSTALLATION, BE PERMANENTLY INDENTIFIED AS THE LINE 2 (RED) CONDUCTOR AT EACH END AND AT EVERY POINT WHERE THE CONDUCTOR IS ACCESSIBLE. IDENTIFICATION WILL BE ACCOMPLISHED BY:
(A) COLORING THE EXPOSED INSULATION RED
(B) MARKING THE EXPOSED INSULATION WITH RED TAPE.

SERVICE ENTRANCE: TYPE USE OR XHHW, NO. 6 AWG

EQUIPMENT GROUND: BARE OR INSULATED, NO. 6 AWG

POLE: NO. 12 AWG, THW OR THWN

BRANCH CIRCUIT FEEDERS, INCLUDING NEUTRALS: USE OR XHHW (IN CONDUIT) NO. 6 AWG

COLOR CODES: "INSULATED EQUIPMENT GROUND" - GREEN
"LINE 1" - BLACK
"LINE 2" - RED

FUSED DISCONNECT ENCLOSURE

FUSED DICONNECT SHALL HAVE A CAST ALUMINUM WEATHERPROOF CASE. DOOR SHALL BE HINGED, GASKETED AND SHALL HAVE PROVISION FOR A PADLOCK. PROVIDE WEATHERPROOF HUBS FOR ALL CONDUIT ENTRIES AND CABLE-GRIP BUSHINGS OF CORRECT SIZE FOR ALL CABLE ENTRIES.

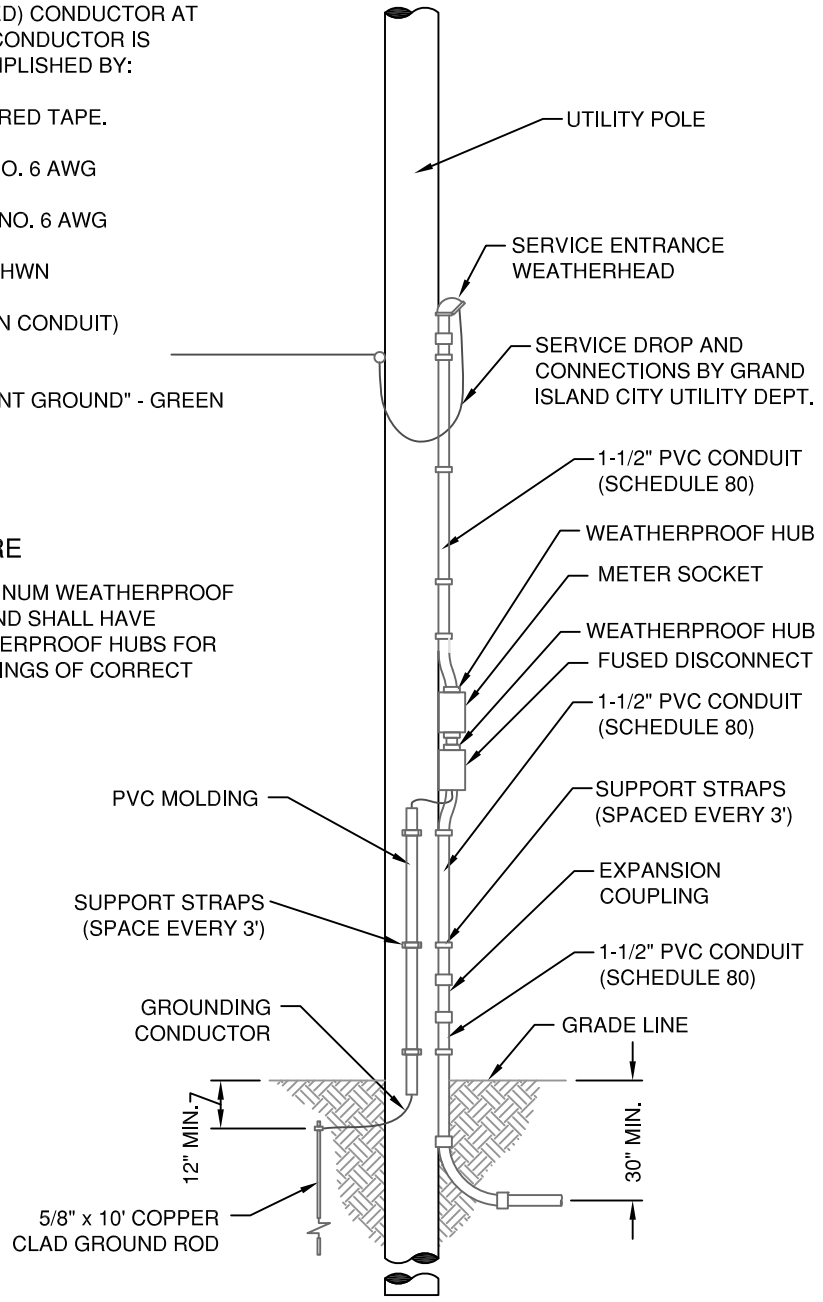

GENERAL NOTES

UNLESS INDICATED OTHERWISE, ALL COMPONENTS OF THE LIGHTING / POWER INSTALLATION ARE TO BE FURNISHED AND INSTALLED BY THE CONTRACTOR.

CONTRACT CITY UTILITY DEPARTMENT 72 HOURS PRIOR TO REQUIRING SERVICE CONNECTIONS.

ALL BOXES AND CABINETS WITH ACCESS TO ELECTRICAL COMPONENTS MUST BE PADLOCKED IMMEDIATELY AFTER INSTALLATION. CONTRACTOR SHALL PROVIDE PADLOCK DURING CONSTRUCTION PERIOD. AFTER FINAL ACCEPTANCE OF PROJECT, MAINTAINING UTILITY OR AGENCY WILL PROVIDE PADLOCK.

REVISED: 5/27/2003

CITY OF GRAND ISLAND UTILITIES DEPARTMENT	DATE : 10/01/1998 DRAWN BY : T.D.Z. CHECKED BY : T.W.B.	LIGHTING / POWER CONTROL CENTER TYPE "R"	PLAN EO-22

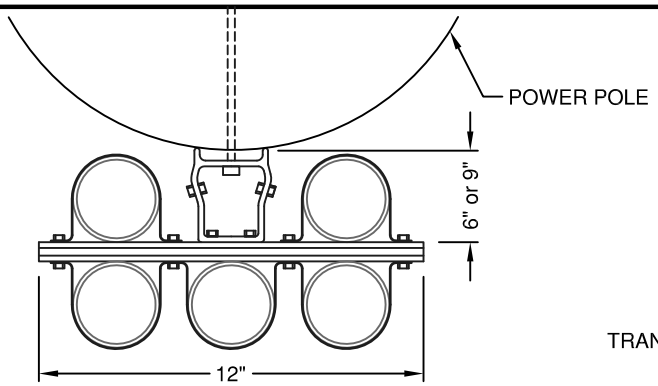

STANDOFF BRACKET WITH T-SLOT
TYPICAL CONDUIT CONFIGURATIONS

PER N.E.C. TABLE 352.30 SUPPORT OF RIDGED NONMETALLIC CONDUIT (RNC)	
CONDUIT SIZE	MAXIMUM SPACING BETWEEN SUPPORTS
1/2" - 1"	3 FT.
1-1/4" -2"	5 FT.
2-1/2" - 3"	6 FT.
3-1/2" - 5"	7 FT.
6"	8 FT.

NOTES:
ANY CONDUIT INSTALLED ON A UTILITY POLE SHALL BE INSTALLED WITH STANDOFF BRACKETS UNLESS OTHERWISE PRIOR APPROVAL IS RECEIVED FROM THE GRAND ISLAND UTILITIES DEPARTMENT. ***THE STANDOFF BRACKETS SHALL BE FURNISHED AND INSTALLED BY THE CITY OF GRAND ISLAND UTILITIES DEPARTMENT.***

BRACKETS SHALL HAVE A STANDOFF DISTANCE OF SIX (6) INCHES. THE CONDUIT ATTACHMENT BRACKET SHALL BE A MINIMUM OF TWELVE (12) INCHES LONG. ***EACH BRACKET SHALL BE BOLTED THROUGH THE POLE WITH A 5/8" MACHINE BOLT AND ONE 1/2"X4" LAG SCREW.***

THE STANDOFF BRACKETS SHALL BE POSITIONED ON THE POLE SO ADJACENT PROPERTIES CAN HAVE EASY ACCESS.

WEATHER HEAD HEIGHT SHALL BE: 1'-6" BELOW THE BOTTOM OF THE TRANSFORMER; OR TO THE TOP WIRE OF THE SECONDARY RACK OR "J" HOOK.

BRACKET SPACING REQIREMENTS:
- FIRST BRACKET - WITHIN ONE (1) FOOT OF FINSIHED GRADE.
- SECOND BRACKET - A MIN OF EIGHT (8) FEET ABOVE FIRST BRACKET.
- SUBSEQUENT BRACKETS SHALL BE INSTALLED PER N.E.C., ARTICLES 344.30 AND 352.30.

THE G.I.U.D. SHALL INSTALL ALL STANDOFF BRACKETS ON ALL POLES. THE ELECTRICAL CONTRACTOR SHALL CONTACT THE ELECTRIC LINE DIVISION (308-385-5471) A MIN. OF TWENTY-FOUR (24) HOURS IN ADVANCE TO MAKE ARRANGEMENTS FOR ANY SUCH WORK.

SECONDARY PEDESTAL SHALL BE SUPPLIED BY G.I.U.D. IF A STAND ALONE METER PEDESTAL IS REQUIRED, THE ELECTICAL CONTRACTOR SHALL SUPPLY THE METER PEDESTAL, CONDUIT, AND WIRE TO THE TOP OF POLE.

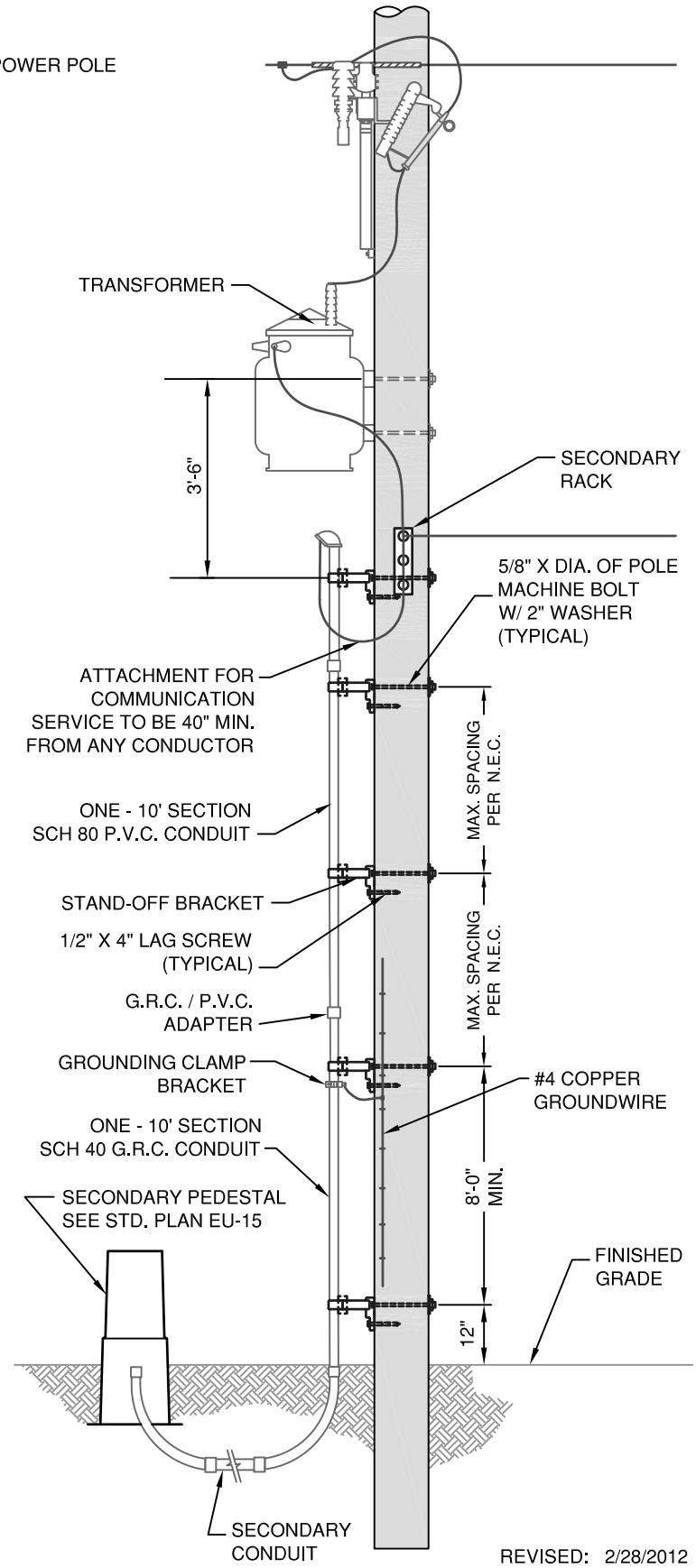

REVISED: 2/28/2012

CITY OF GRAND ISLAND UTILITIES DEPARTMENT	DATE: 12/2/2004 DRAWN BY: T.D.Z. CHECKED BY: T.W.B.	SECONDARY STAND-OFF BRACKET	PLAN EO-23

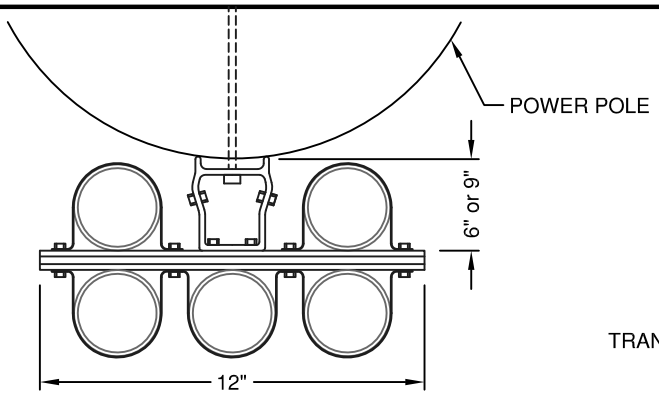

STANDOFF BRACKET WITH T-SLOT
TYPICAL CONDUIT CONFIGURATIONS

PER N.E.C. TABLE 352.30 SUPPORT OF RIDGED NONMETALLIC CONDUIT (RNC)	
CONDUIT SIZE	MAXIMUM SPACING BETWEEN SUPPORTS
1/2" - 1"	3 FT.
1-1/4" -2"	5 FT.
2-1/2" - 3"	6 FT.
3-1/2" - 5"	7 FT.
6"	8 FT.

NOTES:
ANY CONDUIT INSTALLED ON A UTILITY POLE SHALL BE INSTALLED WITH STANDOFF BRACKETS UNLESS OTHERWISE PRIOR APPROVAL IS RECEIVED FROM THE GRAND ISLAND UTILITIES DEPARTMENT. ***THE STANDOFF BRACKETS SHALL BE FURNISHED AND INSTALLED BY THE CITY OF GRAND ISLAND UTILITIES DEPARTMENT.***

BRACKETS SHALL HAVE A STANDOFF DISTANCE OF SIX (6) INCHES. THE CONDUIT ATTACHMENT BRACKET SHALL BE A MINIMUM OF TWELVE (12) INCHES LONG. ***EACH BRACKET SHALL BE BOLTED THROUGH THE POLE WITH A 5/8" MACHINE BOLT AND ONE 1/2"X4" LAG SCREW.***

THE STANDOFF BRACKETS SHALL BE POSITIONED ON THE POLE SO ADJACENT PROPERTIES CAN HAVE EASY ACCESS.

WEATHER HEAD HEIGHT SHALL BE: 1'-6" BELOW THE BOTTOM OF THE TRANSFORMER; OR TO THE TOP WIRE OF THE SECONDARY RACK OR "J" HOOK.

BRACKET SPACING REQIREMENTS:
- FIRST BRACKET - WITHIN ONE (1) FOOT OF FINSIHED GRADE.
- SECOND BRACKET - A MIN OF EIGHT (8) FEET ABOVE FIRST BRACKET.
- SUBSEQUENT BRACKETS SHALL BE INSTALLED PER N.E.C., ARTICLES 344.30 AND 352.30.

THE G.I.U.D. SHALL INSTALL ALL STANDOFF BRACKETS ON ALL POLES. THE ELECTRICAL CONTRACTOR SHALL CONTACT THE ELECTRIC LINE DIVISION (308-385-5471) A MIN. OF TWENTY-FOUR (24) HOURS IN ADVANCE TO MAKE ARRANGEMENTS FOR ANY SUCH WORK.

SECONDARY PEDESTAL SHALL BE SUPPLIED BY G.I.U.D. IF A STAND ALONE METER PEDESTAL IS REQUIRED, THE ELECTICAL CONTRACTOR SHALL SUPPLY THE METER PEDESTAL, CONDUIT, AND WIRE TO THE TOP OF POLE.

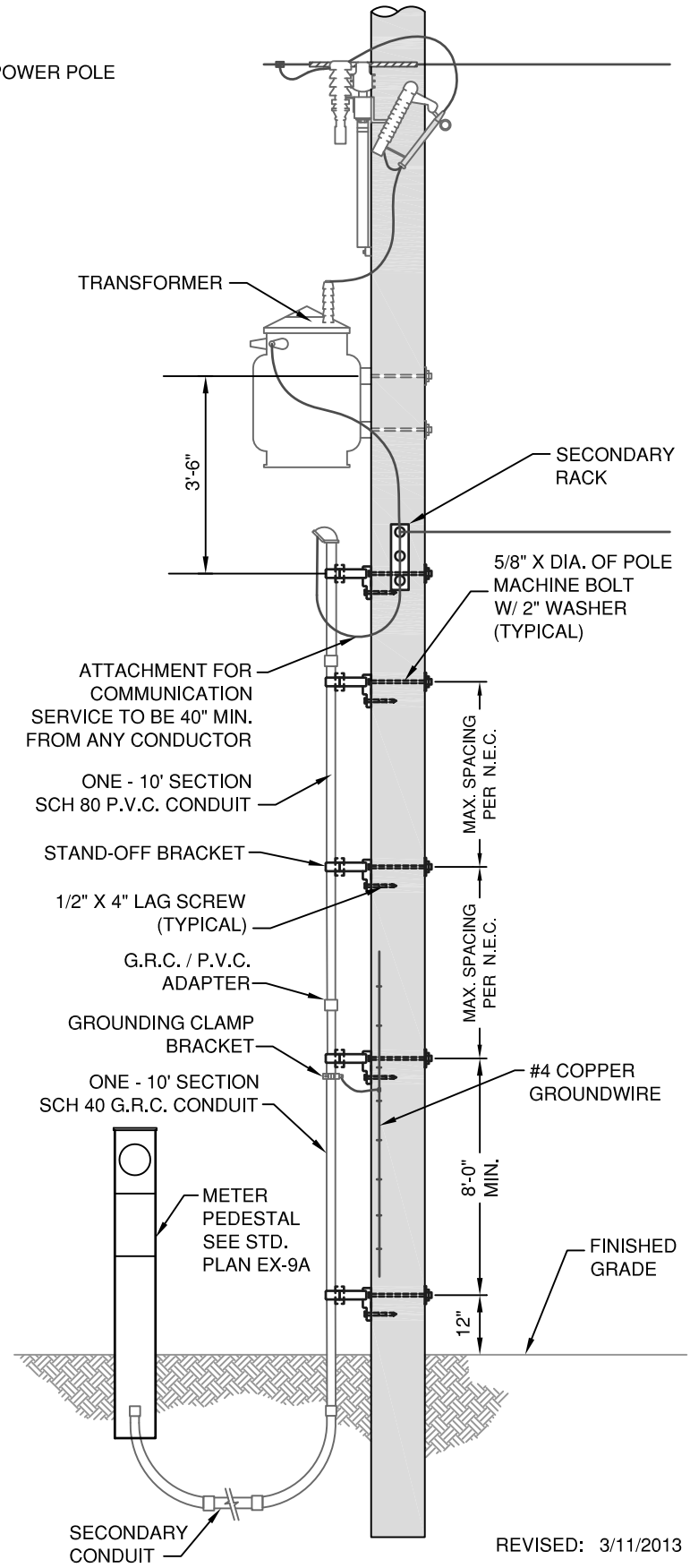

REVISED: 3/11/2013

CITY OF GRAND ISLAND UTILITIES DEPARTMENT	DATE: 3/11/2013 DRAWN BY: K.J.M. CHECKED BY: T.W.B.	SECONDARY STAND-OFF BRACKET WITH METER PEDESTAL	PLAN EO-24